NO	DATE	REVISION	BY	CH	APPROVED		
B	7-14-94	GENERAL REVISION					
0	8/12/94	ER 3028			JRH		
5	2/20/96	ECN 9651	DMM	HAB			
6	9/15/97	ECN 10945	HAB	DRS			
7	5/25/04	ECN 25908	LRD	HAB			
4	8/28/95	PER FCN TM-0921,1021	MJL	GLS			

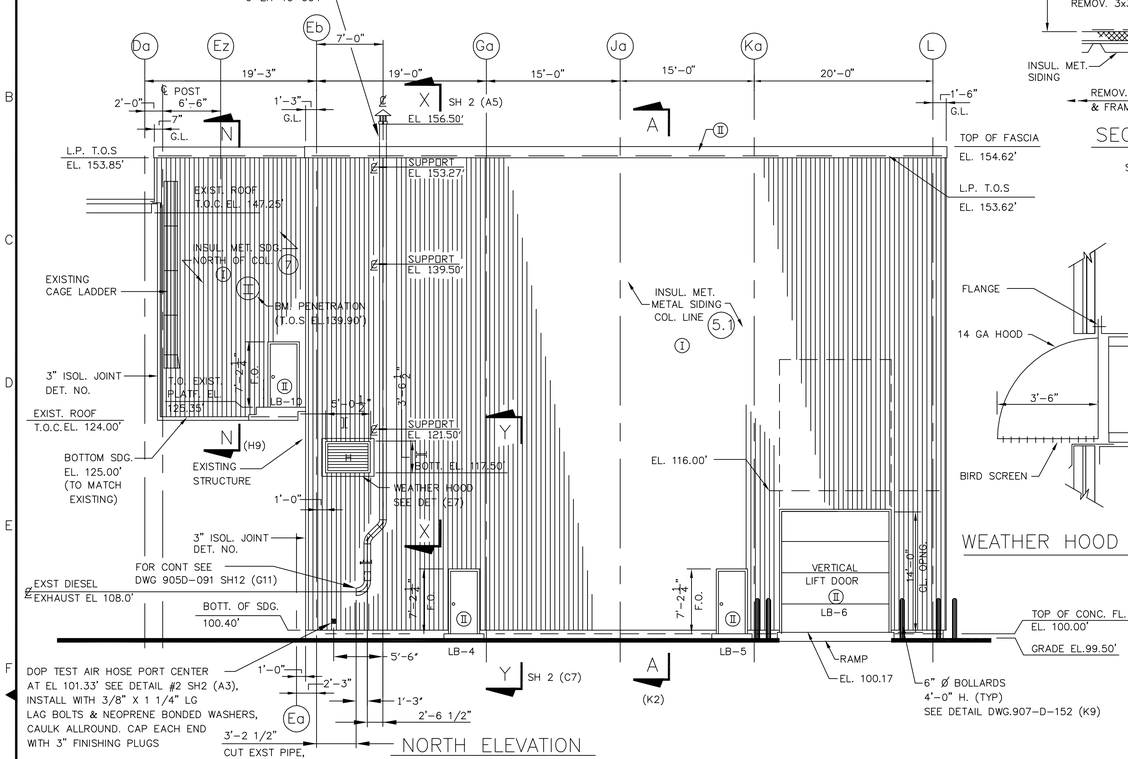

NORTH ELEVATION
SCALE : 1/8" = 1'-0"

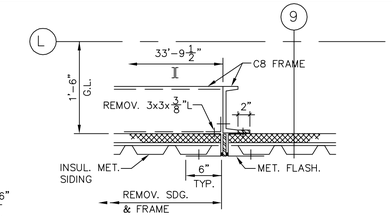

SECTION P-P (C13)
TYP @ JAMB
SCALE : 1" = 1'-0"

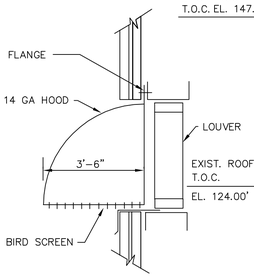

WEATHER HOOD DET (E3)

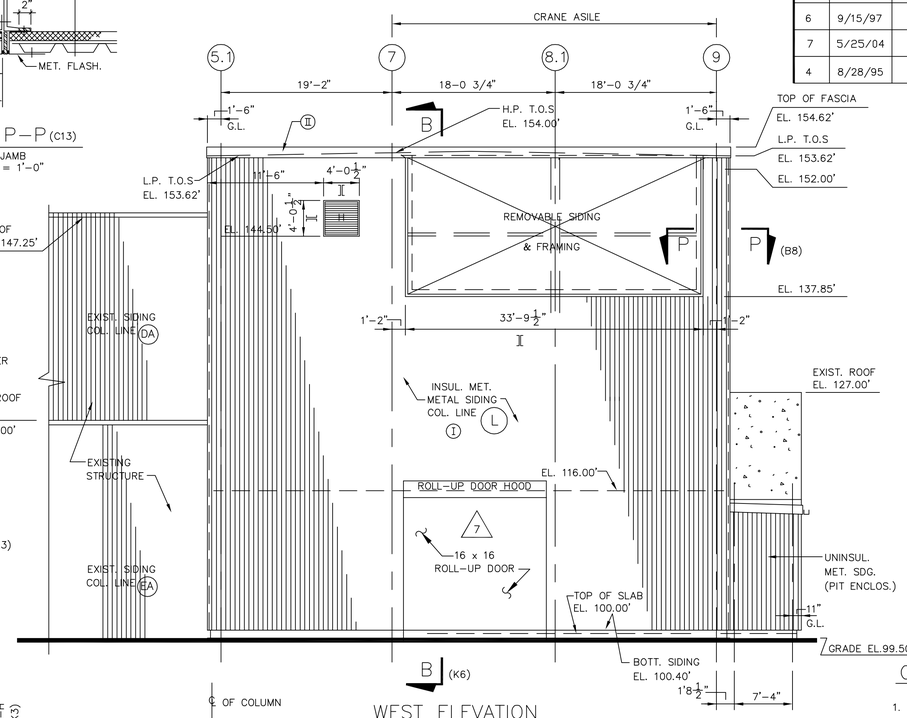

WEST ELEVATION
SCALE : 1/8" = 1'-0"

WVNS APPROVAL

COG. MGR. D.J. RICKETTSON FOR T.E.C.
COG. ENGR. L.E. DONOVAN
DRFT. SUPR. JOHN HORTON 8/12/94
Q.A. APPVL. R. CZYZEWSKI
SYS ENGR APPVL. L.E. DONOVAN

LEGEND :

F.O. = FRAME OPENING
H = HVAC WALL OPENING
(I) = EXTERIOR WALL & ASSEMBLIES LIGHT COLOR "DOVER SAND"
(II) = EXTERIOR DOORS & TRIM DARK COLOR "SEAL BRONZE"
*** = BY SIDING CONTRACTOR
◪ = EXIT SIGN ILLUMINATED

GENERAL NOTES :

1. ALL NEW METAL SIDING (TYPE & COLOR) TO MATCH EXISTING VF SIDING AS CLOSELY AS POSSIBLE BY USING INLAND BUILDINGS STANDARD COLORS DUAL COAT "DOVER SAND" COLOR PANELS AND THE MATCHING "SEAL BRONZE" TRIM.
2. FLASHING AND WEATHERTIGHT CLOSURES FOR BEAMS AND MISC. STEEL PENETRATING EXTERIOR SIDING – BY SIDING CONTRACTOR.
3. DIMENSIONS LOCATING DRYWALL PARTITIONS ARE GIVEN TO THE FINISH FACE OF GYPSUM BOARD.
4. FOR ADDITIONAL INFORMATION & DETAILS SEE SPECIFICATION CS-205.
5. WELD TO BE FREE OF CRACKS AND POROSITY

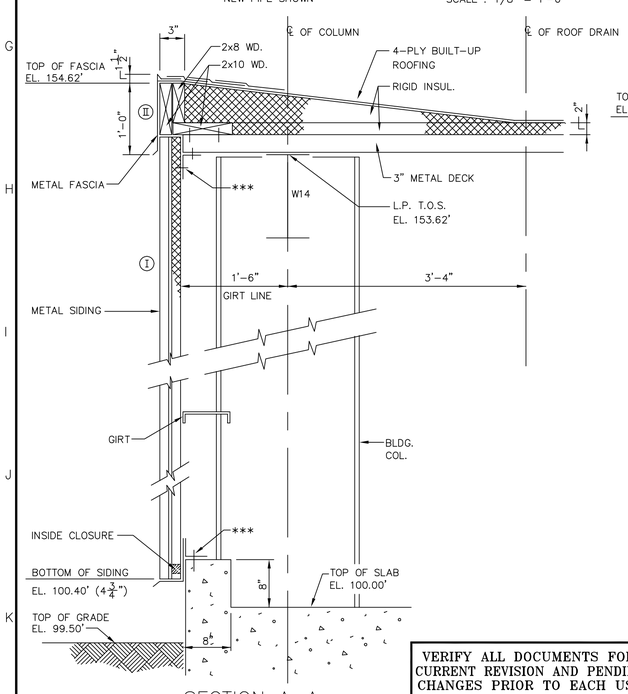

SECTION A-A (F5)
SCALE : 1" = 1'-0"

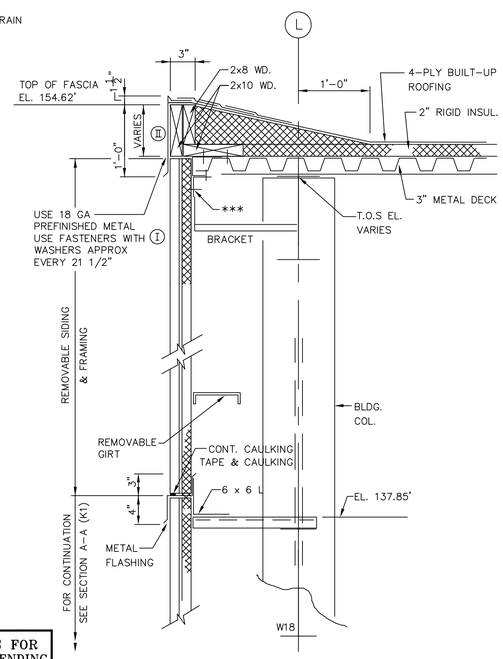

SECTION B-B (F11)
SCALE : 1" = 1'-0"

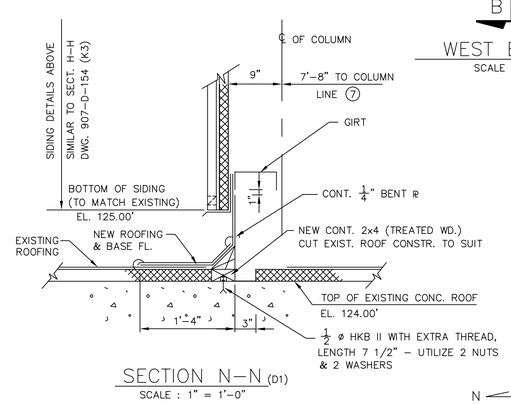

SECTION N-N (D1)
SCALE : 1" = 1'-0"

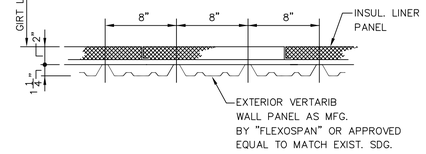

TYPICAL SIDING PROFILE
SCALE : 1 1/2" = 1'-0"

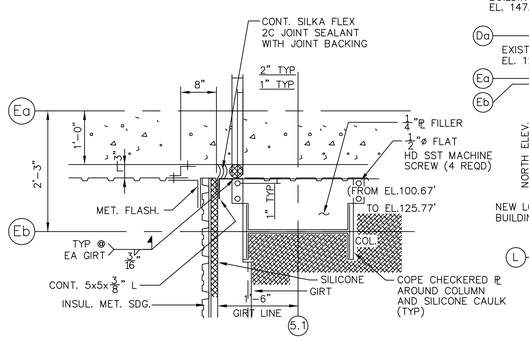

DETAIL NO. 1 (907-D-150) (F1)
SCALE : 3/4" = 1'-0"

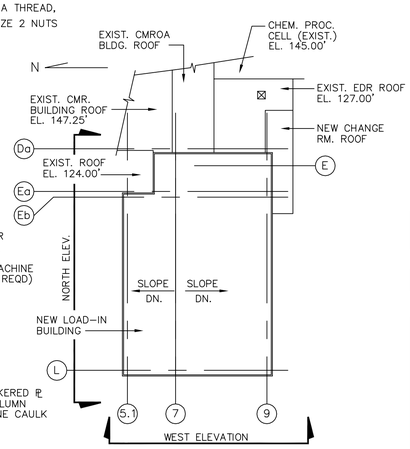

KEY PLAN
N.T.S.

0 1 2 3FT 1 1/2"=1'-0"
0 1 2 3 4FT 1"=1'-0"
1 0 8 16 24 32FT 1/8"=1'-0"

WORK THIS DWG. WITH DWGS. 907-D-150, 152, 154, 105, 106, 107, 109 & 110

VERIFY ALL DOCUMENTS FOR CURRENT REVISION AND PENDING CHANGES PRIOR TO EACH USE
INIT _____ DATE _____

APPRVD WVNS CO.	
PROJECT MGR M. KACZMARSKY	6-2-94
ENGINEER SUPV W. CHAO	6-2-94
LEAD DISC ENG P. HARRISON	6-2-94
DESIGN K.ILACHINSKI	6-2-94
CHECKED J. SANTOSPIRITO	6-2-94
DRAWN M. AVANTE	DATE 6-2-94

DE-AC07-81NE44139 PROJECT NO.
19-CWV-02275 SUBCONTRACT NO.
ISSUED FOR CONSTRUCTION

Raytheon Engineers & Constructors – EBASCO Division
A/E O.F.S. NO. 4889 FOR TASK ORDER 032
WEST VALLEY NUCLEAR SERVICES COMPANY, INC
WEST VALLEY, NEW YORK
WEST VALLEY DEMONSTRATION PROJECT
VITRIFICATION FACILITY
LOAD-IN BUILDING
ARCH. ELEVS. & DETAILS

SIZE	INDEX CODE NUMBER				DRAWING NO.	REV.
	AREA	DR. TYP	CL	ORIG	907D-151	7
D						
SCALE AS NOTED	SPEC. CODES				A/E SHEET NO. 907-D-151 SH 1 OF 2	

OPER: M. MELNIK DATE: 05-18-94 PRELIM REV: P1
PLOT: 1=96
DWG FILE: AD002
140802 1=96.00