NO	DATE	REVISION	BY	CH	APPROVED		
B	7-13-94	GENERAL REVISION					
0	10/2/03	ER 3028			JRH		
1	12/5/94	PER FCN NOx-0367	BP	GLS	MEM		
2	1/23/95	PER FCN NOx-0518	LRK	GLS	MEM		
3	3/15/95	PER ECN 8735	SRD	DRS			
4	4/25/95	PER FCN TM-0155	SAB	GLS	MEM		
5	7/12/95	PER FCN TM-0647	SAB	GLS			
6	5/25/04	ECN 25908	LRD	HAB			

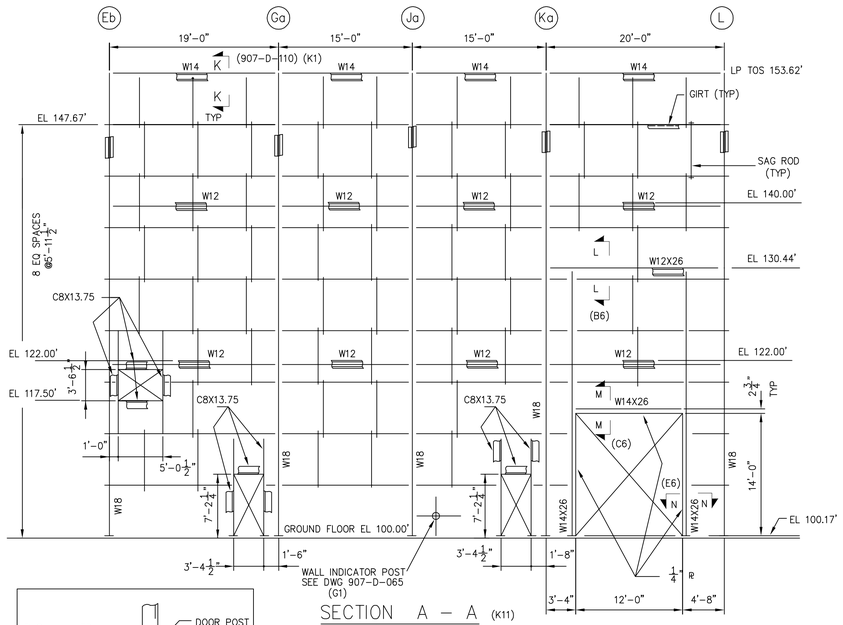

SECTION A – A (K11)

$\frac{1}{8}$"=1'-0

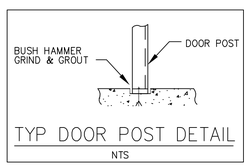

TYP DOOR POST DETAIL

NTS

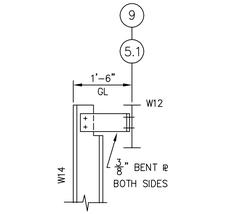

SECT L–L (C4, H2)

NTS

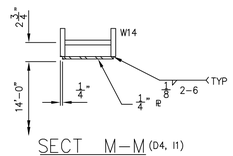

SECT M–M (D4, I1)

NTS

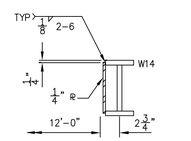

SECT N–N (E5, J2)

NTS

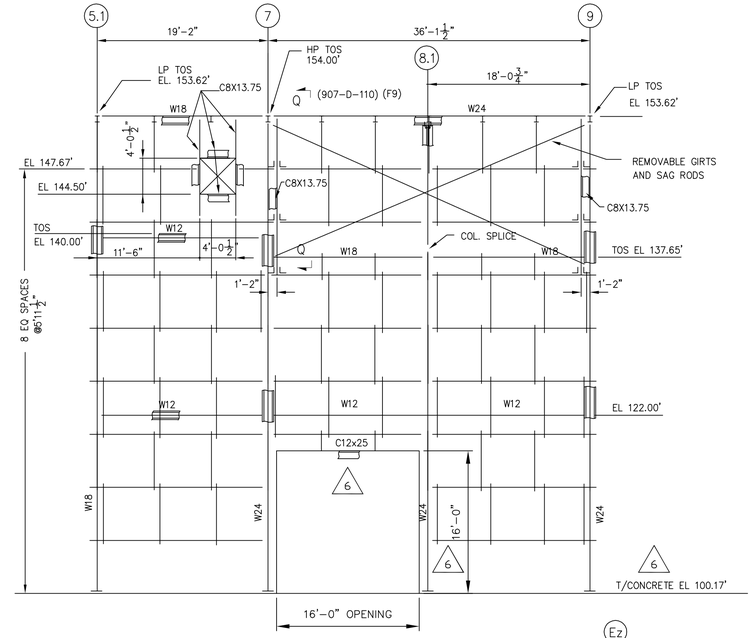

SECTION C – C (K13)

$\frac{1}{8}$"=1'-0

NOTES:

FOR CIVIL GENERAL NOTES SEE DWG. 906-D-100.
FOR OTHER NOTES SEE DWG. 907-D-105 EXCEPT AS NOTED.
ALL BOLTS FOR STRUCTURAL STEEL FIELD CONNECTIONS FOR MISCELLENEOUS PLATFORMS, STAIRS AND LADDERS SHALL BE 3/4"ø ASTM A325 BOLTS.
BOLT HOLES SHALL BE 13/16"ø UN.
ALL GIRTS TO BE C8X13.75 UNLESS OTHERWISE NOTED.
ALL SAG RODS TO BE 1/2"ø THREADED ROD AND SPACING SHALL NOT EXCEED SIX (6) FEET.

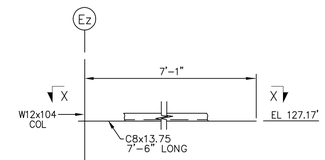

PART SECT B–B

NTS

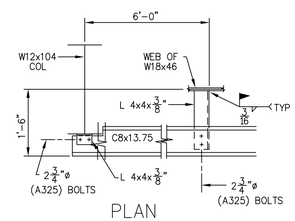

PLAN SECT X–X

NTS

REFERENCE DRAWINGS:

FOR OTHER REFERENCE DRAWINGS SEE DWGS 907-D-101 AND 907-D-105

CIVIL GENERAL NOTES	906-D-100
ARCHITECTURAL DETAILS	907-D-150 THRU 154
CHANGE ROOM, CONCRETE AND STEEL DETAILS	907-D-111

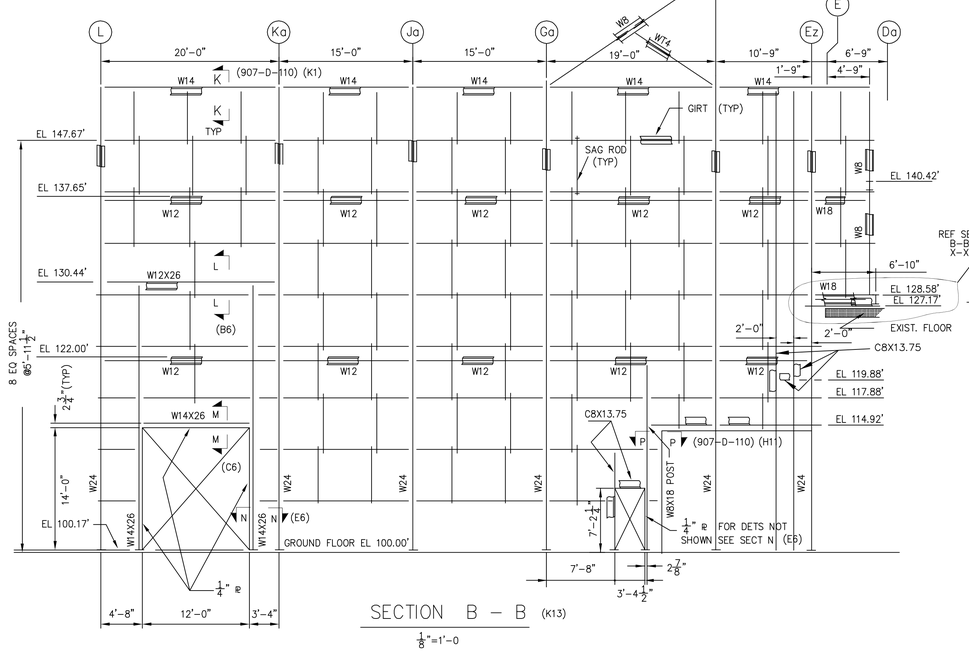

SECTION B – B (K13)

$\frac{1}{8}$"=1'-0

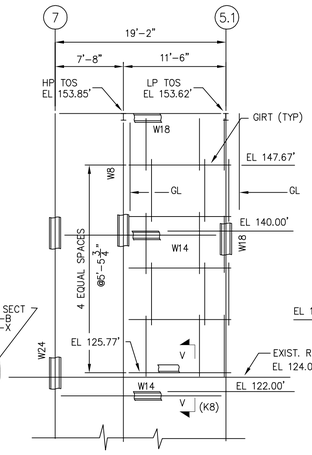

SECTION D – D (I12)

$\frac{1}{8}$"=1'-0

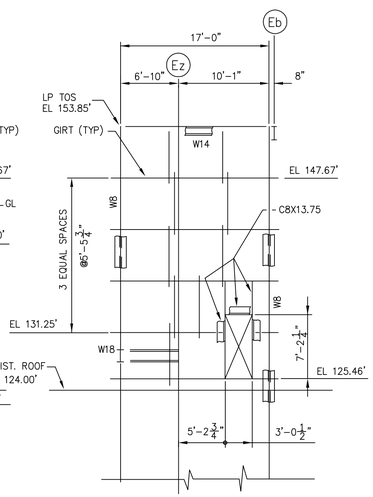

SECTION E – E (J12)

$\frac{1}{8}$"=1'-0

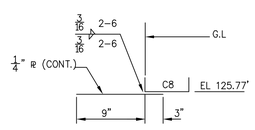

SECT V–V (I8)

NTS

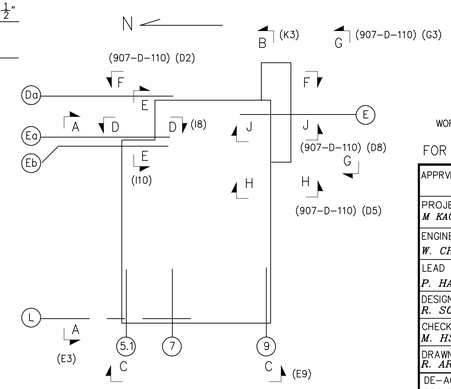

KEY PLAN

NTS

WVNS APPROVAL

COG. MGR.	D.J. RICKETTSON FOR T.E.C.
COG. ENGR.	L.E. DONOVAN
DRFT. SUPR.	JOHN HORTON 8/12/94
Q.A. APPVL.	R. CZYZEWSKI
SYS ENGR APPVL.	L.E. DONOVAN

WORK THIS DRAWING WITH DWG 907-D-110

FOR DRAWING INDEX SEE DRAWING NO. _____

APPRVD WVNS CO	
PROJECT MGR *M KACZMARSKY*	5-16-94
ENGINEER SUPV *W. CHAO*	5-16-94
LEAD DISC ENG *P. HARRISON*	5-16-94
DESIGN *R. SONI*	5-13-94
CHECKED *M. HSU*	5-13-94
DRAWN *R. ARBAI*	DATE 5-13-94

Raytheon Engineers & Constructors. – EBASCO Division

A/E O.F.S. NO. 4889 FOR TASK ORDER 032

WEST VALLEY NUCLEAR SERVICES COMPANY, INC
WEST VALLEY, NEW YORK

WEST VALLEY DEMONSTRATION PROJECT
VITRIFICATION FACILITY
LOAD-IN BUILDING
GIRT FRAMING

DE-AC07-81NE44139 PROJECT NO.	SIZE D	INDEX CODE NUMBER: AREA / DR. TYP / CL / ORIG	DRAWING NO. 907D-109 REV. 6
19-CWV-02275 SUBCONTRACT NO.			
ISSUED FOR CONSTRUCTION	SCALE AS NOTED	SPEC. CODES	A/E SHEET NO. 907-D-109 B

PLOT: 1=48

VERIFY ALL DOCUMENTS FOR CURRENT REVISION AND PENDING CHANGES PRIOR TO EACH USE
INIT _____ DATE _____

140800 1=48