VERIFY ALL DOCUMENTS FOR CURRENT REVISION AND PENDING CHANGES PRIOR TO EACH USE.
INIT_____ DATE_____

REV NO	DATE	REVISION	DR	CH	APPROVED
0	7/13/89	ER 1646			
1	10-11-89	PER ECN 320343305	GM	KMO	WR
2	1-23-90	REV PER ECN 3420	CGR		VAD
3	2-16-90	REV PER ECN 3461	CGR	TEC	VAD
4	1-29-92	REV PER ECN 4795	CGR	HAB	
5	7-22-92	REV PER ECN VF-2B-0155	PD	DRS	

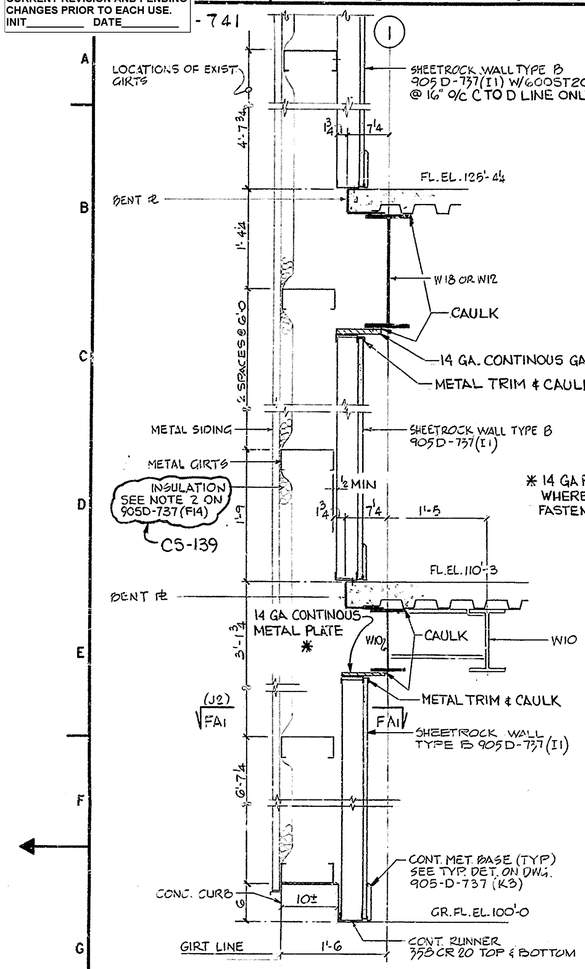

SECT. FA-FA (TYPICAL SECTION @ EXTERIOR WALLS)
DWG. 905-D-733(F2)-734(F2)-735(F2)
1" = 1'-0

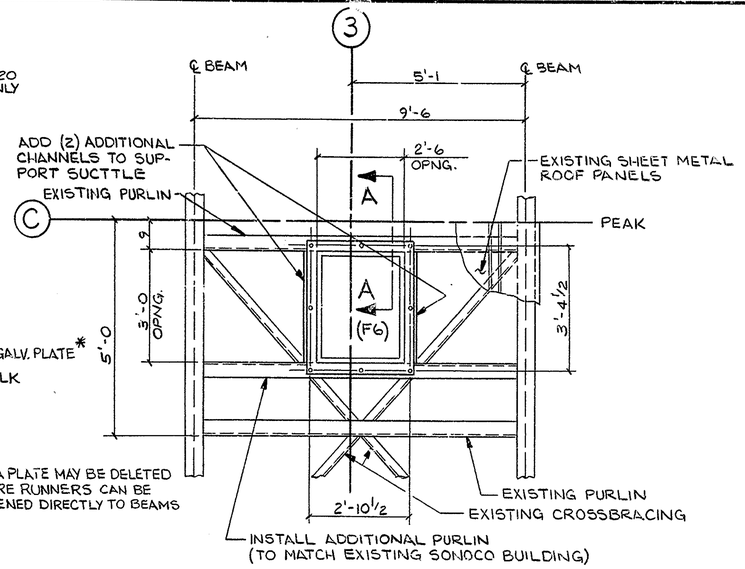

* 14 GA PLATE MAY BE DELETED WHERE RUNNERS CAN BE FASTENED DIRECTLY TO BEAMS

ROOF HATCH INSTALLATION DETAIL
SCALE ½" = 1'-0

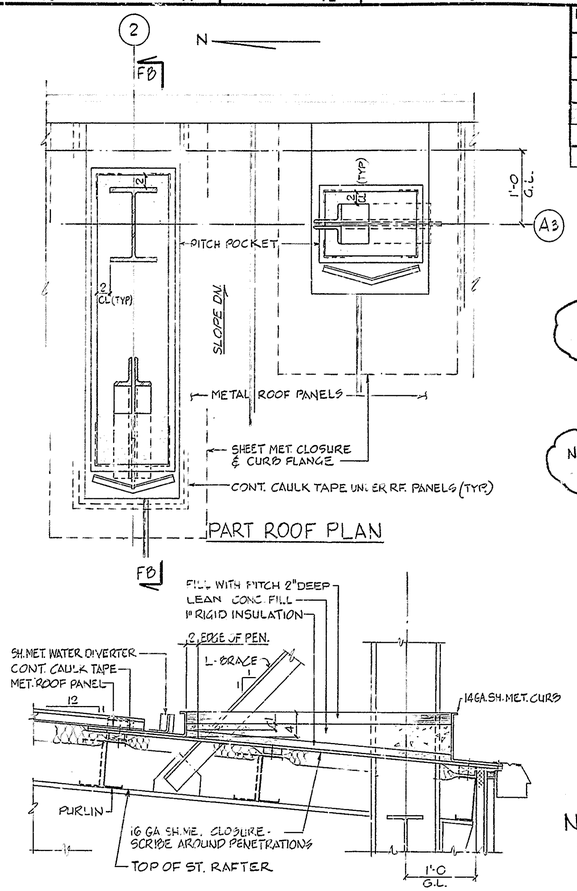

PART ROOF PLAN

THIS DRAWING IS PART OF CS-194 EXCEPT AT ZONES J6, D15, D1 AND RELATED SECTIONS

NOTE: SHEETROCK SYSTEMS, INCLUDING STEEL FRAMING BY CS-139
CS-139

SECTION FB

PITCH POCKET DETAILS
(TYP. AT ROOF PENETRATIONS)
NO SCALE

NOTES:
1. FOR ADDITIONAL NOTES, SEE DWG. 905D-710

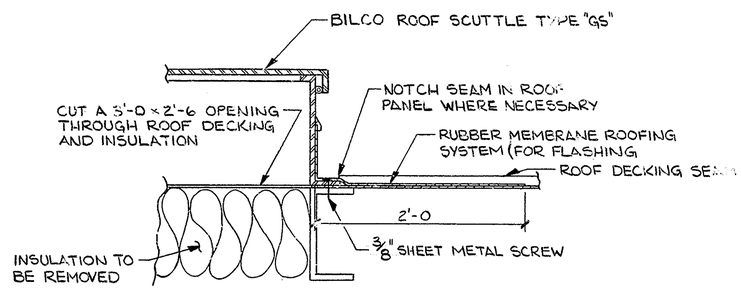

SECTION A-A TYP. FLASHING DETAIL (ALL AROUND)
SCALE 1½" = 1'-0

REFERENCE DRAWINGS:

ARCHITECTURAL ELEVATIONS SH.1	905-D-731
ARCHITECTURAL ELEVATIONS SH.2	905-D-732
ARCHITECTURAL GROUND FL. PLAN EL. 100'-0	905-D-733
ARCHITECTURAL FL. PLAN EL. 110'-3	905-D-734
ARCHITECTURAL FL. PLAN EL. 125'-4¼	905-D-735

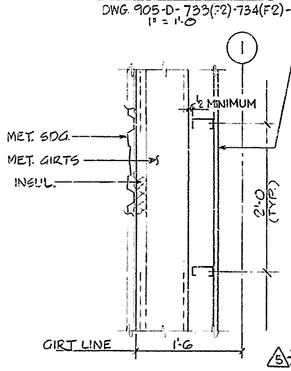

SECT. FA1-FA1 (E1)
1" = 1'-0

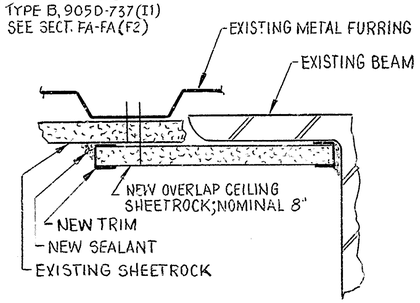

5 * TYPICAL SHEETROCK CEILING EDGE DETAIL
NO SCALE

5 * This detail to be used at all beams and beam/column connections except boxed beams and fireproofed columns.
Leave 1/8 inch between beam web and overlap piece edge.
Width of overlap piece to be nominal 8 inches; piece must be wide enough to extend from beam web out to nearest metal furring for support.
The use of an adhesive between the beam flange and overlap piece is not allowed.
The overlap piece must be long enough to extend into the column webs; the intent is to completely seal off the ceiling with sheetrock.
A notch will be required.

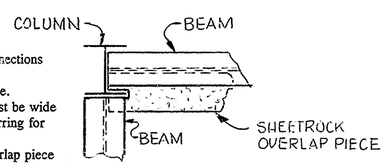

PLAN VIEW * 5
NO SCALE

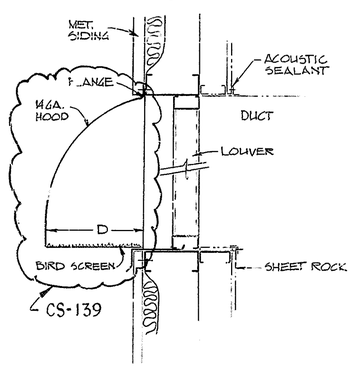

LOUVER DETAIL W/HOOD
NO SCALE
NOTE: SEE DWG. 905-D-732 FOR "D" DIM.

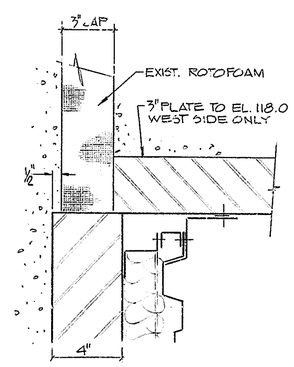

DETAIL FC1 AT ISOLATION JOINT
BELOW EL. 112.0

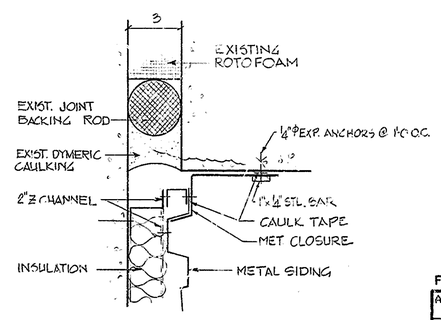

DETAIL FC AT ISOLATION JOINT
905-D-733 (H10, D10) 3" = 1'-0
ABOVE EL. 112.0'

WVNS APPROVAL
COG. MGR.
COG. ENGR.
DRFT. SUPR. 7/13/89
Q.A. MGR.
R&S MGR.

FOR DRAWING INDEX SEE DRAWING NO. _____

APPRVD WVNS CO.		EBASCO SERVICES INCORPORATED A/E O.F.S. NO. 2388 TASK ORDER _____
PROJECT MGR	6/30/89	FOR: WEST VALLEY NUCLEAR SERVICES COMPANY, INC WEST VALLEY, NEW YORK
ENGINEER SUPV	6/30/89	
LEAD DISC ENGR	6/30/89	WEST VALLEY DEMONSTRATION PROJECT
DESIGN	6/29/89	VITRIFICATION FACILITY ARCHITECTURAL SECTIONS & DETAILS
CHECKED	6/29/89	
DRAWN SIROTTO	DATE 6-29-89	
DE-AC07-81NE44139 PROJECT NO.		SIZE D; INDEX CODE NUMBER (AREA, DR. TYP, CL, ORIG); DRAWING NO. 905D-741 SH 1 OF 2; REV. 5
19-CWV-02275 SUBCONTRACT NO.		
ISSUED FOR CONSTRUCTION		SCALE AS NOTED; SPEC. CODES; A/E SHEET NO. 905-D-741 A

0	5	REV	REV STATUS
2	1	SHEET	OF SHEETS