VERIFY ALL DOCUMENTS FOR CURRENT REVISION AND PENDING CHANGES PRIOR TO EACH USE.
INIT________ DATE________

DOOR SCHEDULE

MARK	DWG	CO-ORD	FRAME DET	FRAME D/W	FRAME HEAD	FRAME JAMB	SADDLE TYPE	SADDLE MTL	DOOR TYPE	SIZE	MTL	SWING	GLZG	FIRE RTG	ACTIVE LEAF	* SHIELD	EXIST	REMARKS
D1	905-D-735 905-D-195	F3								(2)3'-0x7'-0	HM				RHR		●	
D2		F3								(2)3'-0x7'-0					RHR		●	
D3		C3								3'-0x7'-0			1/4 CL WIRE GL				●	
D4	905-D-733	H6	E	5 3/4	HD	JD	R	ALUM	I	3'-0x6'-8								
D5		G6	E	5 3/4	HD	JD	R	ALUM	II	3'-0x6'-8			1/4 CL WIRE GL					AT
D6		G6	B	6	HB	JB	—	—	II	3'-0x6'-8			1/4 CL WIRE GL					
D7		G3	B	6	HB	JB	—	—	II	(2)3'-0x6'-8			1/4 CL WIRE GL		LHR			
D8		G2	B	6	HB	JB	—	—	I	(2)(2'-6")x6'-8					LHR			AT
D9		B3	B	6	HB	JB	—	—	II	(2)3'-0x6'-8			1/4 CL WIRE GL		LHR			
D10		H2								12'-0x14'-0	STL						●	ROLL-UP DOOR
D11		H3	B	6	HB	JB	—	-	I	3'-0x6'-8	HM							
D12		H1	E	5 3/4	HA	JA	R	ALUM	V	3'-0x6'-8	HM		1/4 CL WIRE GL	B				AT
D41A	905 D-734	D3	B	6	HBT	JB	—	—	I	(2)5'-0x8'-0	HM				RHR			SEE DOOR(K9) REF D41
D14	905 D-733	G2	B	7 1/4	HB1	JB1	—	—	II	3'-0x6'-8	HM		1/4 CL WIRE GL	B				AT
D15		B2			HC	JC	SC	—	IV	12'-0x14'-0	STL							ROLL-UP DOOR MOTOR OP.
D16		C2	B	6	HB	JB	—	—	I	3'-0x6'-8	HM							AT/FRAME BY CS-139
D17		C2	B	6	HB	JB	—	—	I	(2)5'-0x7'-0	HM				LHR			AT
D18		D7														●	●	BISCO DWG. 63-M-001
D19		D9															●	BISCO DWG. 63-M-008
D20		G8														●	●	BISCO DWG. 63-M 009
D21		F9														●	●	BISCO DWG. 63-M-006
D22		G9															●	BISCO DWG. 63-M-004
D23	905-D-733	D3	B	6	HB	JB	—	—	I	(2)3'-0x6'-8	HM				RHR			
D24	905-D-734	H8														●	●	BISCO DWG. 63-M-005
D25	905-D-733	C4	B	7 1/4	HB1	JB1	—	—	II	3'-0x6'-8	HM		1/4 CL WIRE GL	B				AT
D26		C5	B	7 1/4	HB1	JB1	—	—	II	3'-0x6'-8	HM		1/4 CL WIRE GL	B				AT
D27		B3	E	5 3/4	HA	JA	R	ALUM	I	3'-0x6'-8	HM			B				AT
D28		C6	E	5 3/4	HD	JD	R	ALUM	I	3'-0x6'-8	HM							AT
D29		H2															●	AT EXISTING DOOR
D42A	905 ... 734	D3	B	6	HBT	JB	—	—	I	(2)3'-0x8'-0	HM				RHR			SEE DOOR(J9)
D31	905-D-735 905-D-195	C2														●	●	BISCO DWG. 63-M-007
D32	905-D-734	G7	B	6	HB	JB	R	ALUM	II	(2)3'-0x6'-8	HM		1/4 CL WIRE GL		LHR			AT
D33		H7	E	5 3/4	HD	JD	R	ALUM	II	(2)3'-0x6'-8	HM		1/4 CL WIRE GL		LHR			AT
D34	905-D-735	E8							II							●	●	BISCO DWG. 63-M-002
D35	905-D-734	G3	B	6	HB	JB	—	—	II	3'-0x6'-8	HM		1/4 CL WIRE GL					
D62	905-D-735	H5	B	6	HB	JB	—	—	I	3'-0x6'-8	HM							DR & FRAME BY CS-139
D37	905-D-734	I2	B	5 3/4	HE	JE	T ALUM BY CS-139		II	3'-0x6'-8	HM		1/4 CL WIRE GL	B			●	AT EXIST. DR BY CS-139
D38		I3								(2)3'-0x8'-0	HM				LHR		●	AT EXIST. DOOR
D39		G2	B	7 1/4	HB1	JB1	—	—	II	3'-0x6'-8	HM		1/4 CL WIRE GL	B				AT
D40		I1	E	5 3/4	HA	JA	R	ALUM	V	3'-0x6'-8	HM		1/4 CL WIRE GL	B				AT
D41		D3	B	6	HBT	JB	—	—	II	(2)5'-0x5'-3	HM		1/4 CL WIRE GL		RHR			MONORAIL ABOVE SEE ELEV (K9)
D42		D3	B	6	HBT	JB	—	—	II	(2)1'-6x5'-3	HM		1/4 CL WIRE GL		RHR			MONORAIL ABOVE SEE ELEV (J9)
D43		C4	B	7 1/4	HB1	JB1	—	—	II	3'-0x6'-8	HM		1/4 CL WIRE GL	B				AT
D44		C3	B	7 1/4	HB1	JB1	—	—	II	3'-0x6'-8	HM		1/4 CL WIRE GL	B				AT TACKWELD JAMB TO DIAMOND PLATE
D45	905-D-733	H4	B	6	HB	JB			I	2'-8x6'-8	HM							
D46		H5	B	6	HB	JB			I	2'-8x6'-8	HM							
D47	905-D-733	G10													LHR	●	●	BISCO DWG. 63-M-003
D48	905-D-735	H7	B	6	HB	JB	R	ALUM	II	(2)3'-0x6'-8	HM		1/4 CL WIRE GL		LHR			AT
D49		H7	E	5 3/4	HD	JD	R	ALUM	II	(2)3'-0x6'-8	HM		1/4 CL WIRE GL		LHR			AT
D50		G3	B	6	HB	JB	—	—	II	4'-0x6'-8	HM		1/4 CL WIRE GL		RHR			
D51		D4	B	6	HB	JB	—	—	II	(2)2'-6x6'-8	HM		1/4 CL WIRE GL		LHR			
D52	905-D-735	C4	B	7 1/4	HB1	JB1	—	—	II	3'-0x6'-8	HM		1/4 CL WIRE GL	B				AT
D53		C4	B	7 1/4	HB1	JB1	—	—	II	3'-0x6'-8	HM		1/4 CL WIRE GL	B				AT
D54	905-D-731	B2							I	2'-6x5'-0	HM						●	
D55	905-D-732	B11							I	2'-6x5'-0	HM						●	
D56	900-D-2722	C7	E	5 3/4	HD	JD	R	ALUM	I	(2)2'-6x7'-10	HM							AT
D61	905-D-734	I5	B	6	HB	JB	T	ALUM	I	3'-0x6'-8	HM			B				AT/DR & FRAME BY CS-139
D57	900-D-2722	C7	E	5 3/4	HD	JD	R	ALUM	I	2'-6x6'-8	HM							AT
D58	900D-2722 SH.1	C7	B	6	HB	JB	R	ALUM	I	(2)2'-6x6'-8	HM							AT
D59	900D-2849	D8	E	5 3/4	HD	JD	R	ALUM	III A	2'-8"x6'-8"	HM		1/4 CL WIRE GL					
D60	900D-2849	C6	E	5 3/4	HD	JD	R	ALUM	III A	2'-8"x6'-8"	HM		1/4 CL WIRE GL					

NEARSIDE IND. KEYED SIDE OR OUTSIDE OF DOOR

*DOOR SUPPLIED BY WVNS

HARDWARE SCHEDULE

MARK	LOCK	HINGE	CLOSER	LOCK KEY KA	LOCK KEY SMK	LOCK KEY MK	PANIC HDW	FLUSH BOLT	REMARKS	LINTEL
D1									FOR DETS SEE	
D2									DWG 905-D-195 B	
D3									& 905-D-196 B	
D4	L6	H1	●P				●		NRP	
D5	L6	H1	●P				●		NRP.	
D6	L5	H1	●				●			
D7	L1	HH1	●					●	FB	
D8	L1	HH1	●					●	ALL DOUBLE DOORS TO HAVE ASTRAGALS	
D9	L1	HH1	●					●	FB	
D10										
D11	L1	H1	●							
D12	L6	H1	●P				●		NRP	
D41A	L3								FB	
D14	L5	H1	●				●			
D15	BY MFR	—	—							
D16	L6	H1	●				●			
D17	L3	2H1	●					●	FB	
D18										
D19										
D20									INSTALL NEW SARGENT #8715 ETL 26D EXIT DEVICE	
D21										
D22								●		
D23	L1	HH1	●					●	FB, DOUBLE DOORS TO HAVE ASTRAGALS	
D24										
D25	L5	H1	●				●			
D26	L5	H1	●				●		LOCK & PANIC HDW BY CS-139	
D27	L6	H1	●P				●		NRP	
D28	L6	H1	●P				●		NRP.	
D29	L6		●P						PROVIDE NEW LOCK & CLOSURE	
D42A	L1	2H1							FB	
D31										
D32	L5	HH1	●				●	●	ALL DOUBLE DOOR TO HAVE ASTRAGALS	
D33	L6	HH1	●P				●	●	FB NRP	
D34	L6	H1								
D35	L1	H1	●							
D62	L6	H1	●				●		LOCK & PANIC HDW BY CS-139	
D37	L6	H1	●				●		LOCK & PANIC HDW BY CS-139	
D38	L3						●		INSTALL IOHNA GASKET	
D39	L5	H1	●				●			
D40	L6	H1	●P				●		NRP.	
D41		2H1						●	ALL DOUBLE DOORS TO HAVE ASTRAGALS	
D42		HH1						●		
D43	L5	H1	●				●			
D44	L5	H1	●				●			
D45	L4	H1	●						TOILET DOOR	
D46	L4	H1	●						TOILET DOOR	
D47								●		
D48	L5	HH1	●				●	●	ALL DOUBLE DOORS TO HAVE ASTRAGALS	
D49	L6	HH1	●P				●	●	NRP	
D50	L1	HH1	●					●		
D51	L1	HH1	●					●	ALL DOUBLE DOORS TO HAVE ASTRAGALS	
D52	L5	H1	●				●			
D53	L5	H1	●				●			
D54	L3								PROVIDE NEW LOCK	
D55	L3									
D56	L6	HH1							FRAME AROUND MONORAIL SEE ELEVATION "A"	
D61		H1	●P				●		EXIT ONLY, NO OUTSIDE TRIM, HARDWARE BY CS-139	
D57	L6	HH1	●P				●		NRP	
D58	L1	HH1							FB FRAME AROUND MONORAIL ELEV A	
D59	L6	H1	●P				●		NRP	
D60	L6	H1	●P				●		NRP	

MISCELLANEOUS (CONT)(H10)
ASTRAGAL GASKET
NATIONAL GUARD PRODUCTS INC
540 TN PARKWAY
P.O. BOX 70343
MEMPHIS, TN. 38107
BY CS-139

U.L. RATING
LABEL A 3 HOUR RATING
LABEL B 1 1/2 HOUR RATING

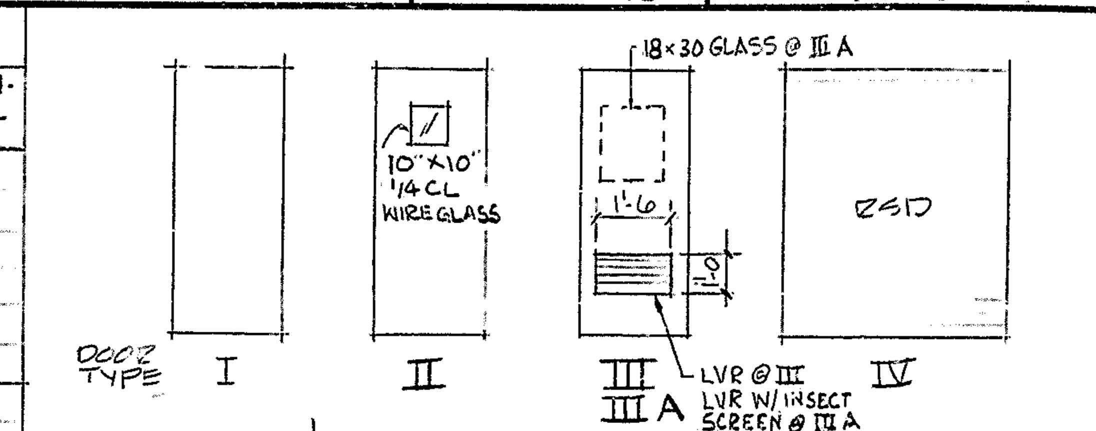

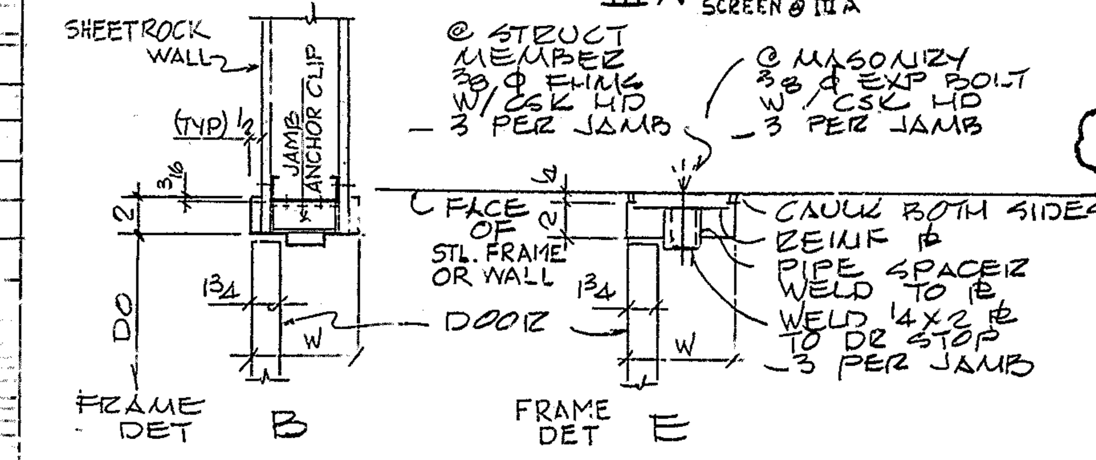

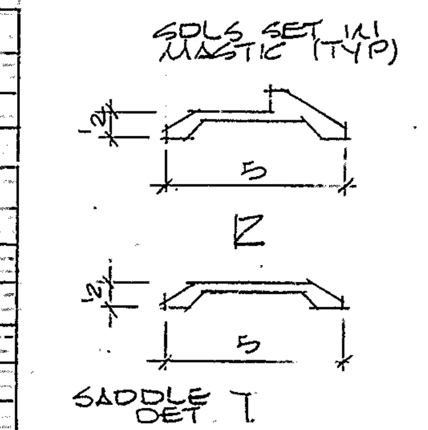

NOTE:

2. USE OF STEEL RAWL DRIVE ANCHORS (MIN DIA 3/8") (MIN EMB 2") IS ACCEPTABLE AS AN EQUAL ANCHOR.
3 REINFORCE INTERIOR DOORS/FRAMES WITH FIRE RETARDENT 2X4 STUDS.

CMPNT	TAPCON SCR DIA	EMBED-MENT
SADDLE	1/4"	2 1/4"
FRAME	1/4"	4"

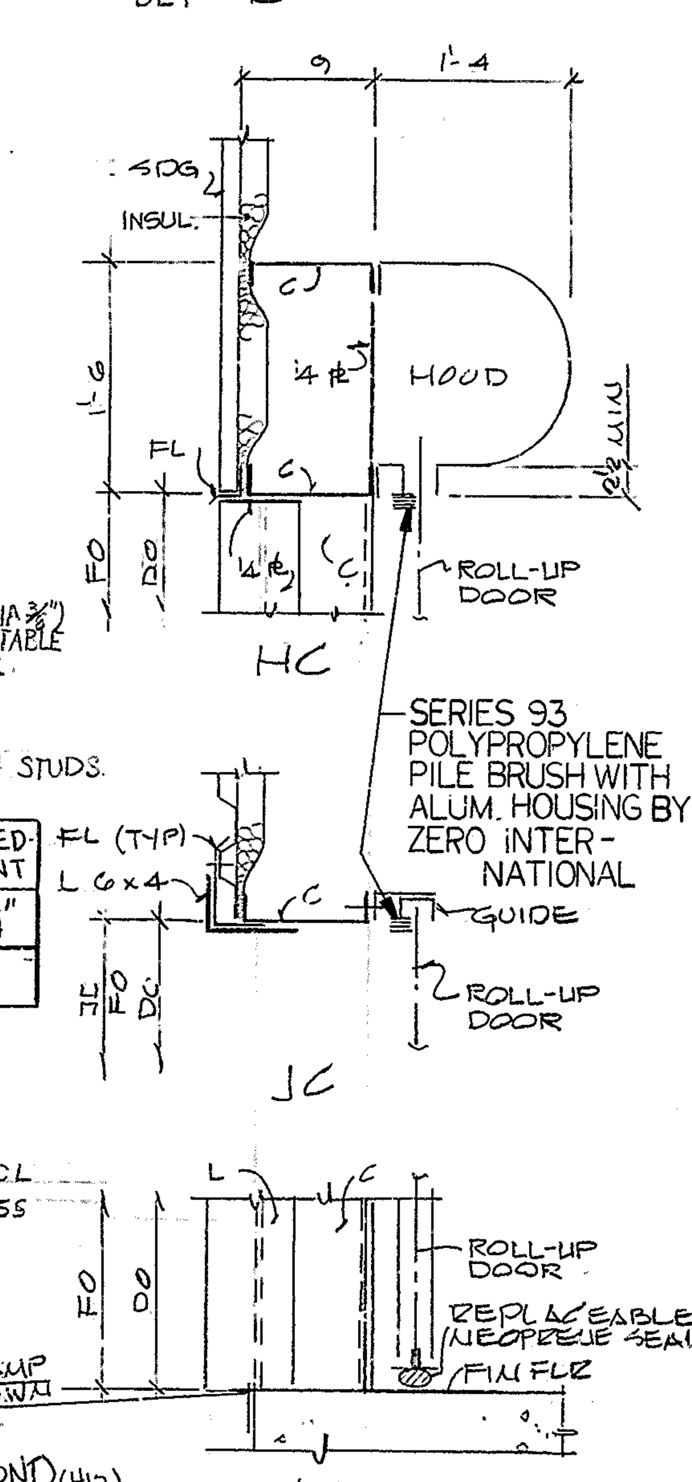

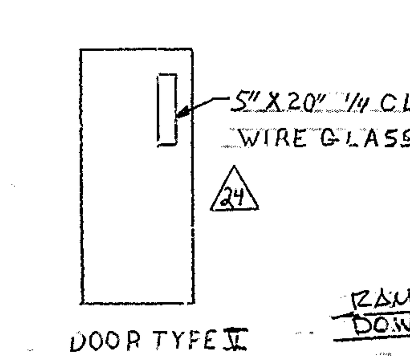

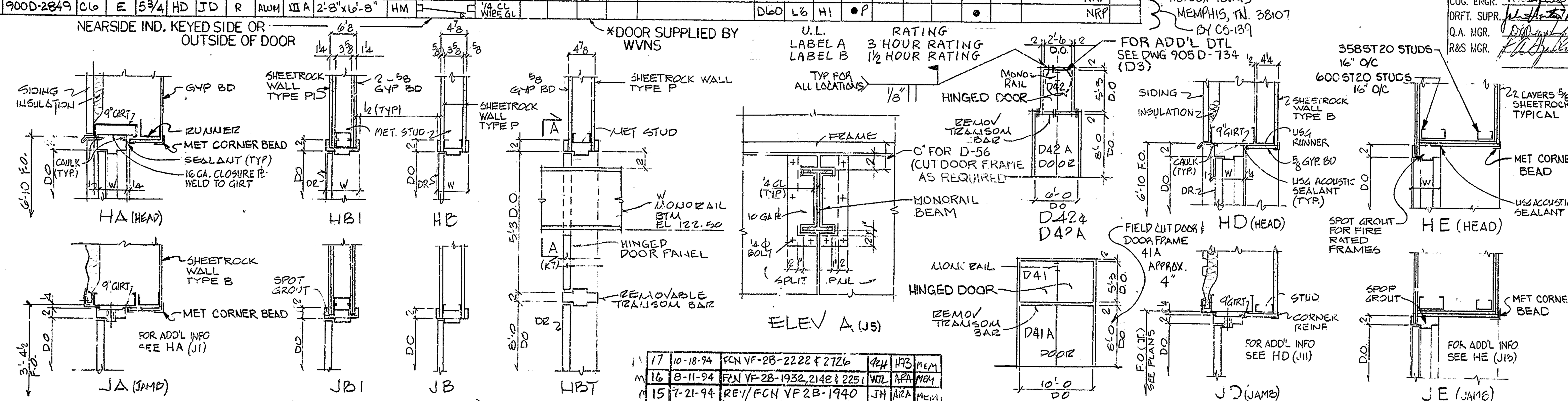

NO	DATE	REVISION	BY	CHK	APP
17	10-18-94	FCN VF-2B-2222 & 2726		HB	MEM
16	8-11-94	FCN VF-2B-1932, 2148 & 2251	WJL	APA	MEM
15	7-21-94	REV/FCN VF2B-1940	JH	APA	MEM

REV NO	DATE	REVISION	DR	CH	APPROVED
~~0~~	~~6-29-89~~	~~REVISED PER EBAR 1225~~			
0	7/13/89	ER1646			
24	2-2-98	ECN 11079	DLL	HB	
19	1-16-95	FCN TM-0019	GW	CLS	MEM
20	3-11-95	REV/FCN TM-0063	MJL	CLS	EFK
21	10-3-95	FCN TM-T163	GW	CLS	EFK
22	10-16-95	FCN TM-1258	PD	CH	EFK
23	9-3-96	ECN 10192	GW	HB	

THIS DWG. IS PART OF CS-194 EXCEPT AS NOTED AT ZONES H6, H9, F9, B16, I10, C6, D9, E9 & RELATED SECTIONS

NOTE: SHEETROCK SYS INCL STEEL FRAMING BY CS-139, EXCEPT BATHROOM & HOIST ROOM AIRLOCK.

HARDWARE SCHEDULE
CS-139

LOCKSETS & LATCHSETS:

MANUFACTURER:
RUSSWIN OR APPD ALT

DESIGN:
HEAVY DUTY CYLINDER, MORTISE ANTI-FRICTION LATCH, WROUGHT ALUM SCREWLESS SHANK, ASHFORD DESIGN

FINISH:
US 26D DULL CHROMIUM

TYPE:
L1 - FEDERAL 86N - 5025 - LATCH
L3 - " 86N - 5045 - OUTER KNOB BY KEY
L4 - " 86L - 5039 - BATHROOM LOCK
L5 - " 93 DTK - LATCH (U592)(592)
L6 - " 93 K - OUTER KNOB BY KEY (U592/592)

REMOVABLE CORE REQ'D, RUSSWIN OR APP'D ALT "RECORE" CYLINDERS

HINGES:

MANUFACTURER:
STANLEY WORKS OR APPD ALT

DESIGN:
STEEL BALL BEARING, FULL MORTISE TEMPLATE

FINISH:
P - PRIMED FOR PAINTING

TYPE:
H1 - BB179P - 4 1/2 x 4 1/2 - ALL MS - 3 HINGES PER LEAF
HH1 - SAME FOR PR OF DRS (HH INDICATES PR OF DRS)
2H1 - BB179P - 6 x 4 1/2 - ALL MS - 4 HINGING PER LEAF
NRP - FURNISH HINGES WITH NON REMOVABLE PINS.

CLOSERS:

MANUFACTURER:
RUSSWIN OR APPD ALT.

DESIGN:
SURFACE TYPE, DOOR MOUNTING, LIQUID CONTR., R9100 SERIES

FINISH:
SBL - SILVER ALUM LACQUER

SUFFIX P - FURNISH PARALLEL ARM ON PUSH SIDE
FURNISH CLOSER ON ACTIVE LEAF OF PAIR OF DOORS

EXIT DEVICES (PANIC HDW)
MANUFACTURERS: TYPE:
RUSSWIN OR APPD. ALT. 592 MORTISE "DESIGNER BOLT"
& U592 FOR FIRE RATED DOORS USE MORTISE #5660 & U5660

MISCELLANEOUS: CONT. (H11)

FB - FLUSH BOLT - 199 x 12 x US28 TOP & BTM OF INACTIVE LEAF. DUST PROOF STRIKES T98 & C98

AT - AIRTIGHT DRS, SUPPLY AUTOMATIC BTMS #360 MORTISED W/ #140 ADJUSTABLE HOUSING @ HEAD & JAMBS W/ #140M SURFACE ASTRAGAL FOR EXISTING DOORS ADD #361 SURFACE MOUNTED AUTO. BOT. SEAL AS MFG. BY ZERO INTERNATIONAL, BRONX, N.Y. 10455 OR APVD. ALT.

DOOR STOPS - BURNS MODEL #575. INSTALLED WITH TAPCON SCREW, WROUGHT BRASS MATERIAL

NOTES:

1. FOR ADDITIONAL NOTES, SEE DWG 905D-710

WVNS APPROVAL
COG. MGR.
COG. ENGR.
DRFT. SUPR.
Q.A. MGR.
R&S MGR.

REFERENCE DRAWINGS:

ARCH - GRD FLR PLAN EL 100'-0	905-D-733
ARCH - FLR PLAN EL 110'-3	905-D-734
ARCH - FLR PLAN EL 125'-3	905-D-735
ARCH - CMR OPER AISLE PLAN & DETS	905-D-195
COLD CHEMICAL BLDG SECTS & DETS	905-D-179

FOR DRAWING INDEX SEE DRAWING NO. ________

APPRVD WVNS CO.
PROJECT MGR K.E. Stanley 12-22-88
ENGINEER SUPV D.A. NUTA 12/22/88
LEAD DISC ENGR D.A. NUTA 12/22/88
DESIGN BILAK 12/22/88
CHECKED SANTOSPIRITO 12/22/88
DRAWN BILAK DATE 12/22/87

EBASCO SERVICES INCORPORATED
A/E O.F.S. NO. 2388 TASK ORDER ______
FOR
WEST VALLEY NUCLEAR SERVICES COMPANY, INC
WEST VALLEY, NEW YORK
WEST VALLEY DEMONSTRATION PROJECT
VITRIFICATION FACILITY
DOOR SCHEDULE

DE-AC07-81NE44139 PROJECT NO.
19-CWV-02275 SUBCONTRACT NO.
ISSUED FOR CONSTRUCTION
SIZE D | INDEX CODE NUMBER: AREA, DR. TYP, CL, ORIG | DRAWING NO. 905D-738 | REV 24
SCALE NONE | SPEC. CODES | A/E SHEET NO. 905-D-738 B