905-D-732

REV NO	DATE	REVISION	DR	CH	APPROVED
~~B~~	~~6-29-89~~	~~REVISED PER EDAR 1285~~	~~CS~~	~~HS~~	~~KW~~ ~~HW~~ ~~GGG~~
0	7/13/89	ER 16 46			HW
13	10-25-95	REV FCN TM-1338	MJC	CLJ	
14	10-19-99	ECN 11547	GW	HAS	
15	04-01-2002	ECN 13300	~~WRD~~	~~KB~~	

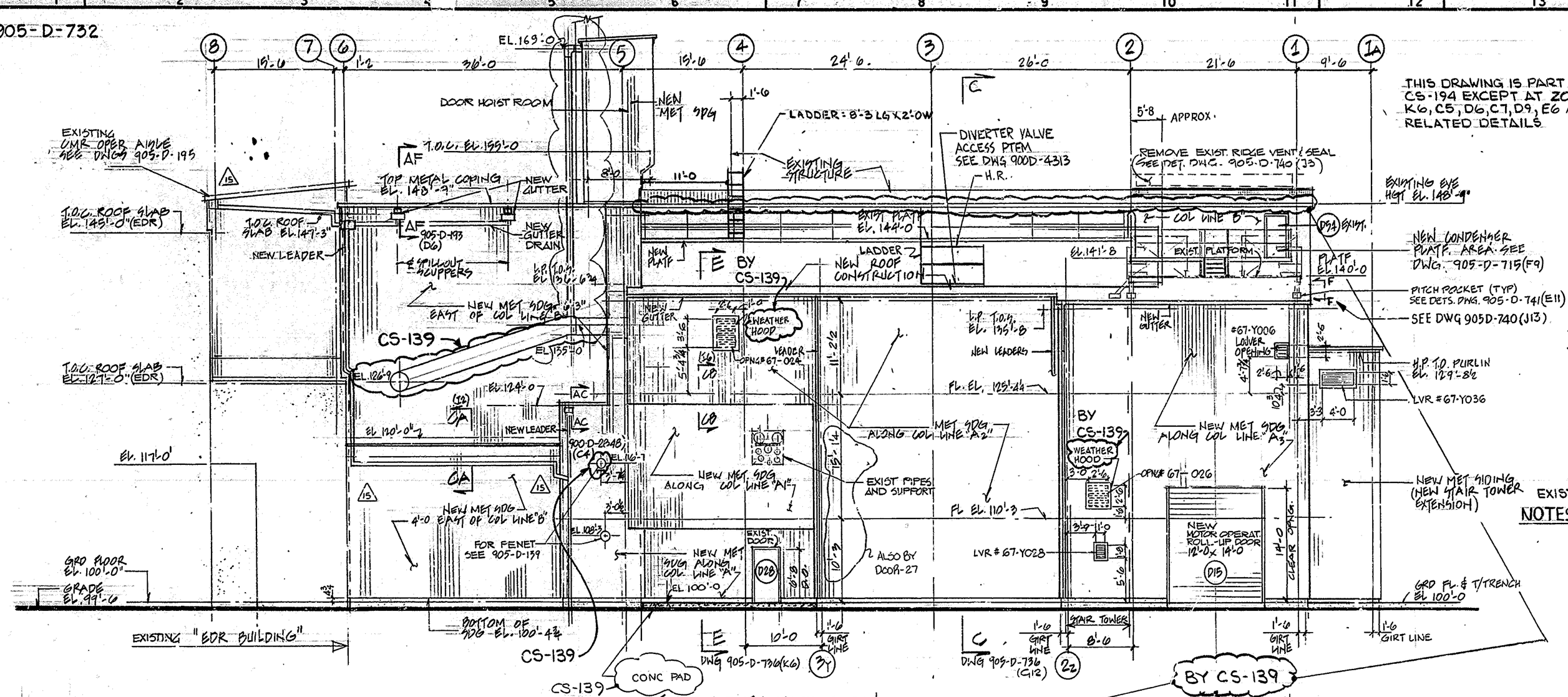

THIS DRAWING IS PART OF CS-194 EXCEPT AT ZONES K6, C5, D6, C7, D9, E6 AND RELATED DETAILS.

REV'S CONT'D (I) H&V PENETRATION SCHEDULE

OPENING #7	USE	ZONE	R.O. BOT. ELEV.	R.O. SIZE W x H	WEATHER HOOD # W x D (MIN)	CONNECT TO	WALL TYPE (SEE DWG. 905-D-737)
001	905-D-731	B3	142'-0	12' x 4'	12'-0 x 4'-0	DUCT	"B"
016		C3	130'-0	2'-6 x 2'-2	2'-6 x 2'-6	DUCT	N/A
022		C7	130'-9	2'-6 x 3'-6	2'-6 x 2'-0	ROOM	"B"
Y020		E6	105'-6	1'-0 x 1'-6	N/A	ROOM	"B"
032		K7	112'-9	2'-6 x 2'-6	2'-6 x 2'-0	DUCT	"A"
Y034		K8	105'-6	1'-6 x 1'-6	N/A	ROOM	"A"
024	905-D-732	C6	130'-9	2'-6 x 3'-6	2'-6 x 2'-0	ROOM	"B"
026		D9	111'-9	2'-6 x 2'-6	2'-6 x 2'-0	DUCT	"A"
Y028		E9	105'-6	1'-0 x 1'-6	N/A	ROOM	"A"
Y006		C11	130'-0	2'-6 x 2'-6	N/A	ROOM	"B"
Y036		D11	126'-3	4'-0 x 1'-6	N/A	ROOM	"A"
Y030	905-D-736	C13	132'-4	2'-6 x 2'-6	N/A	ROOM	"A"
018		C14	132'-4	2'-6 x 2'-6	2'-6 x 2'-0	DUCT	"A"
Y004	905D-731	D6	107'-6	1'-0 x 1'-0	N/A	DUCT	"B"
EXIST. Y041	905D-731	C10	138'-6	1'-2 x 1'-4	1'-2 x 1'-4	DUCT	"B"

* 905D-741 (J7)

NOTES:
1. ALL NEW METAL SIDING (TYPE & COLOR) TO MATCH AS CLOSE AS POSSIBLE, SUNOCO-SUMMIT ARCH LIMESTONE W/BRONZE TRIM. BY CS-139
2. ALL NEW STANDING SEAM ROOF DECK TO MATCH EXIST.
3. FOR ADDITIONAL NOTES SEE DWG. 905D-710

REFERENCE DRAWINGS:

ARCHITECTURAL ELEVATIONS SH. 1		905-D-731
ARCHITECTURAL SECT'S & DET'S SH. 2		905-D-740
ARCHITECTURAL SECT'S & DET'S		905-D-736
V.F. DOOR SCHEDULE		905-D-738

(CONTINUED 39)

EAST ELEVATION

REMOVE EXISTING 6"x2" METAL DRIP EDGE. INSTALL NEW EAVE TRIM, EAVE BOX AND END FILLERS IN ACCORDANCE WITH EAVE OPTION DETAIL 2d" ON DWG 900D-559 SH 12. INSTALLATION AND CAULKING SHALL BE DONE PER MANUFACTURERS RECOMMENDATIONS AND WVNS-CS-139-05300 (METAL SIDING AND ROOF). ALL EAVE TRIM SHALL BE 24 GA MINIMUM.

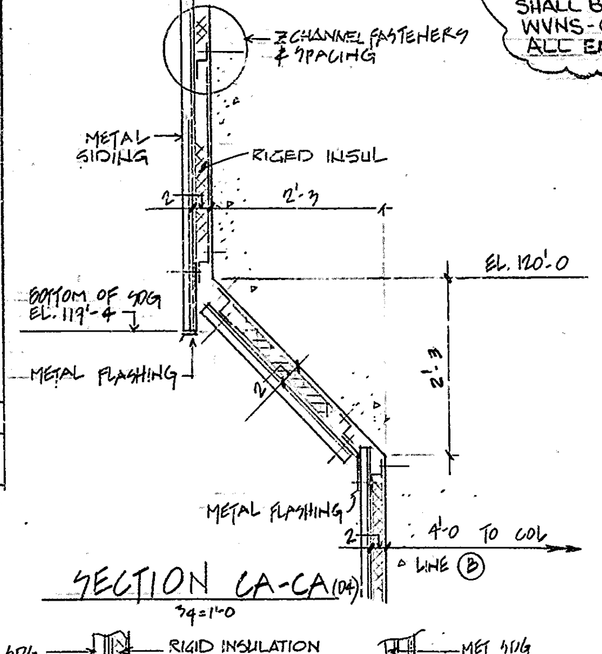

SECTION CA-CA (D4)
3/4=1'-0

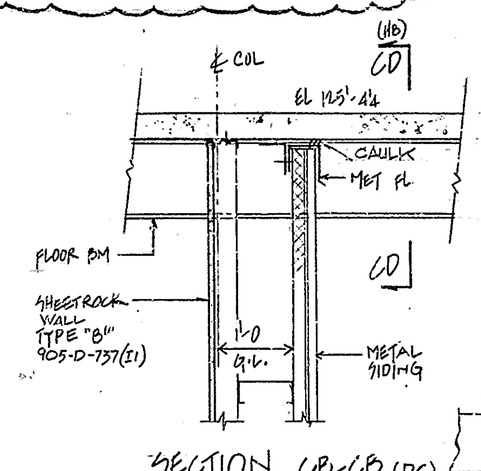

SECTION CB-CB (D6)
3/4=1'-0

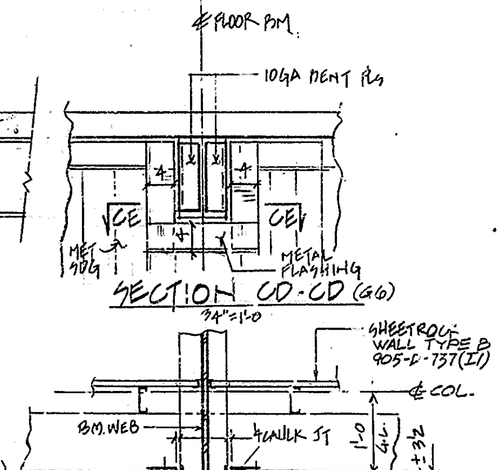

SECTION CD-CD (G6)
3/4=1'-0

SECTION CE-CE (H8)
3/4=1'-0

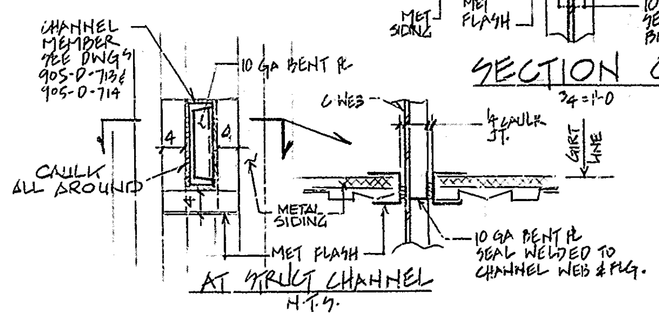

AT STRUT CHANNEL
N.T.S.

TYP BM & CHANNEL PENETRATION THRU THE SDG FLASHING DET'S

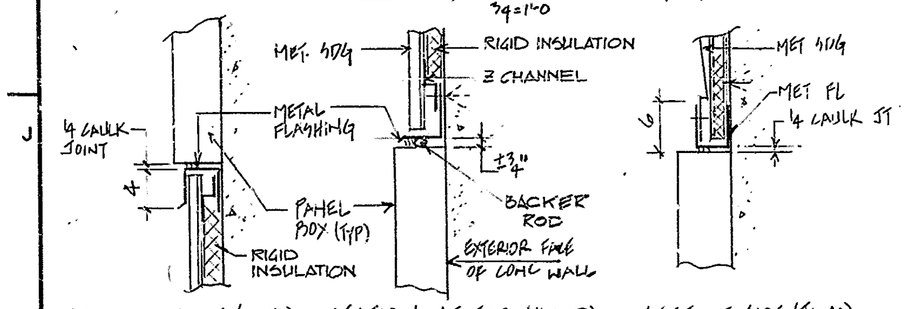

SECT AT BOTT (SILL) 1"=1'-0
SECTION AT TOP. (HEAD) 1"=1'-0
SECT AT SIDE (JAMB) 1"=1'-0

FLASHING DETAILS AT WALL MOUNTED PANEL BOX

NOTE: ALL SHEETROCK BY CS-139 EXCEPT FOR BATHROOMS AND HOIST ROOM AIRLOCK — CS-139

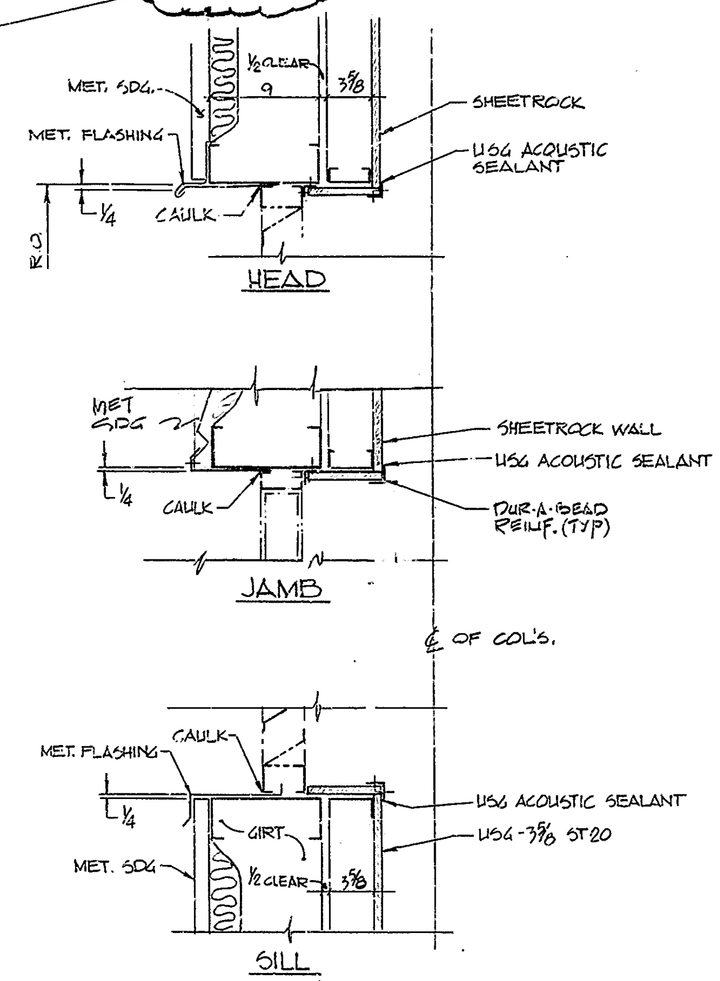

LOUVER DETAIL W/O HOOD & DUCT
SCALE: ½"=1'-0

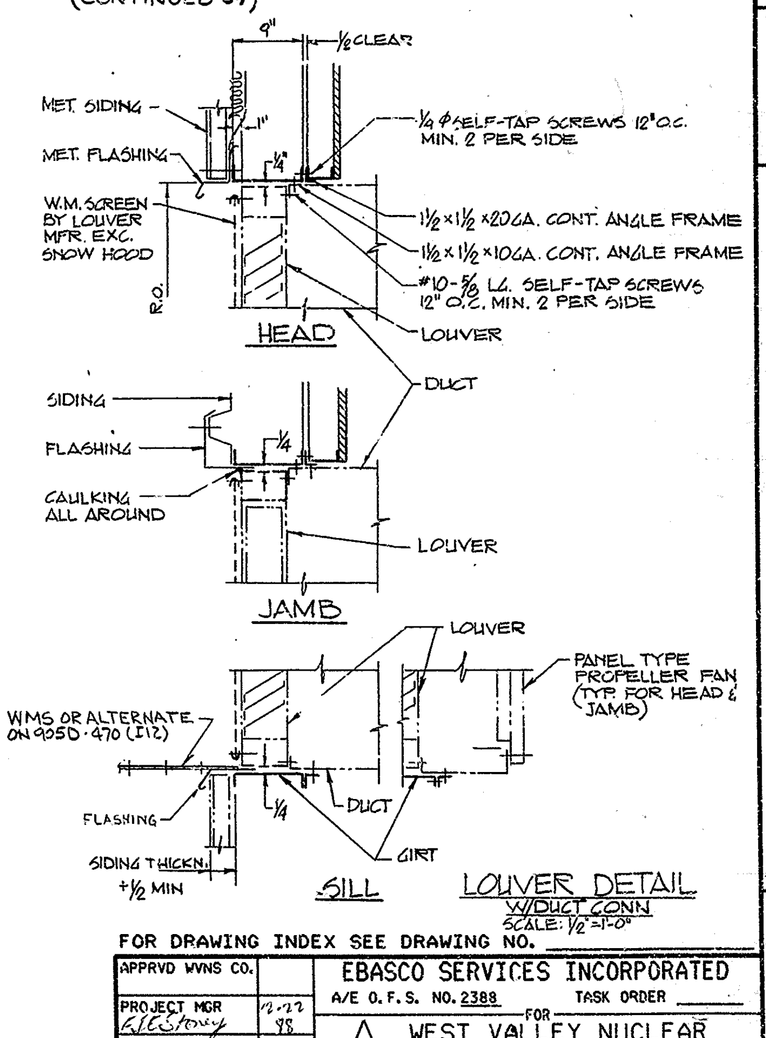

LOUVER DETAIL W/DUCT CONN.
SCALE: ½"=1'-0"

FOR DRAWING INDEX SEE DRAWING NO.

REFERENCE DRAWINGS (CONT.)

ARCHITECTURAL SECT'S & DET'S SH. 3	905D-741
ROOF FRAMING & DET'S SH. 2	905D-715
ARCHITECTURAL ROOF DET'S	905D-193
CMR OPERATING AISLE ARCHITECTURAL PLANS & DET'S.	905D-195
ARCHITECTURAL MISCELLANEOUS SECT'S & DET'S.	905D-737
ARCHITECTURAL ROOF DET'S EL. 121'-0 PLANS & SEC'S.	900E-2848

WVNS APPROVAL
COG. MGR.
COG. ENGR.
DRFT. SUPR. 7/13/89
Q.A. MGR.
R&S MGR.

APPRVD WVNS CO.		EBASCO SERVICES INCORPORATED
PROJECT MGR	12-22	A/E O.F.S. NO. 2388 TASK ORDER
ENGINEER SUPV	12/12/88	FOR WEST VALLEY NUCLEAR SERVICES COMPANY, INC WEST VALLEY, NEW YORK
LEAD DISC ENGR	12/12/88	WEST VALLEY DEMONSTRATION PROJECT
DESIGN	10/22/87	VITRIFICATION FACILITY ARCHITECTURAL ELEVATIONS SH #2
CHECKED	12/28/87	
DRAWN	DATE 7/20/87	
DE-AC07-81NE44139 PROJECT NO.		SIZE D; INDEX CODE NUMBER: AREA, DR. TYP, CL, ORIG; DRAWING NO. 905D-732; REV. 15
19-CWV-02275 SUBCONTRACT NO.		
ISSUED FOR CONSTRUCTION		SCALE ½"=1'-0"; SPEC. CODES; A/E SHEET NO. 905-D-732 B

REVISIONS

ZONE	REV	DESCRIPTION	BY	CHKD	DATE	APPROVED
	4	REV. PER ECN 4690	GW		12-5-91	
	5	REV. PER ECN 5550	GW	HB	10-28-92	GW
	6	REV. PER ECN 5445	SRD	JHS	1-14-93	PAW
	7	REV. PER ECN 6820	JH	JHS	9-27-94	E.W.C.
	9	REV. PER ECN 7338	GW	DRS	2-15-94	CEF
	10	REV. PER ECN 7619	AAL	HB	3-8-94	E.W.C.
	11	REV/FCN VF-2B-1894		HB	3-24-94	MEW
	12	REV/FCN-TM-0115	PD	CG	3/27/95	E.F.K.