VERIFY ALL DOCUMENTS FOR CURRENT REVISION AND PENDING CHANGES PRIOR TO EACH USE.
INIT_____ DATE_____

5-D-729

REV NO	DATE	REVISION	DR	CH	APPROVED
0	7/13/89	ER IC 46			
1	7-3-91	REV. PER FCN VF-2A-316	GW	HAB	
2	7-31-91	PER: FCN VF-2A-327	TFH	DRB	
3	3-4-96	PER FCN TM-2009	DAK	HRB	

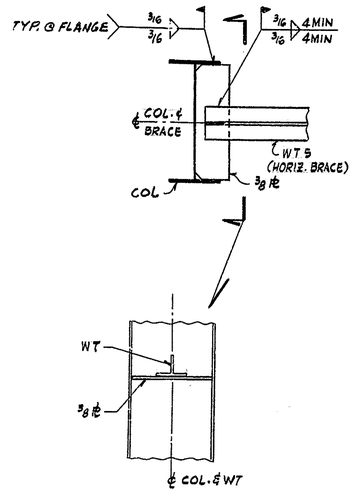

DETAIL '17'

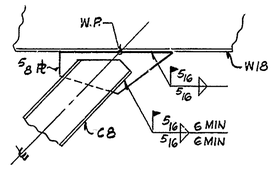

DETAIL '18'

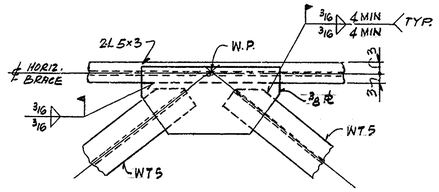

DETAIL '19'

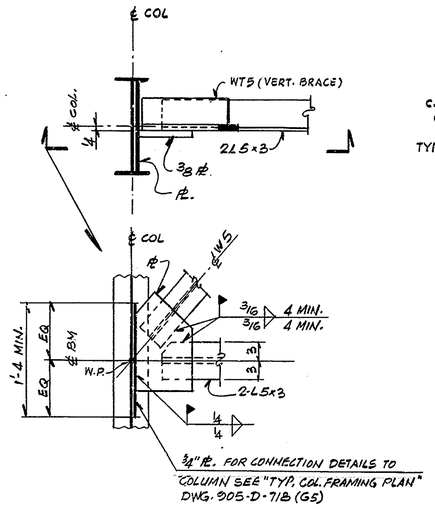

DETAIL '20'

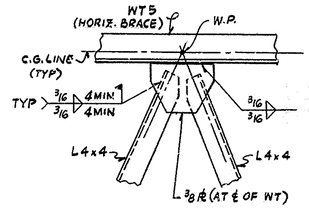

DETAIL '21'

NOTES:

1- FOR NOTES & REFERENCE DWGS. SEE DWG. 905-D-727
2- FOR LOCATION OF DETAILS SEE DWG. 905-D-727

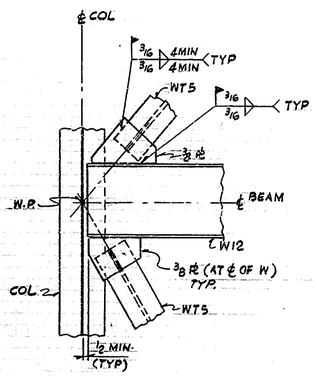

DETAIL '22'

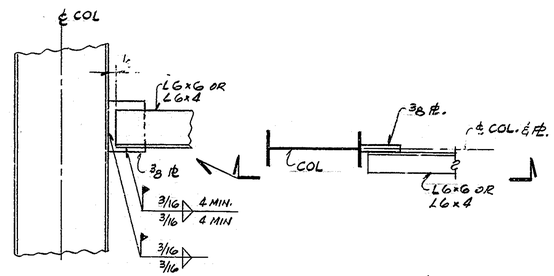

DETAIL '23'

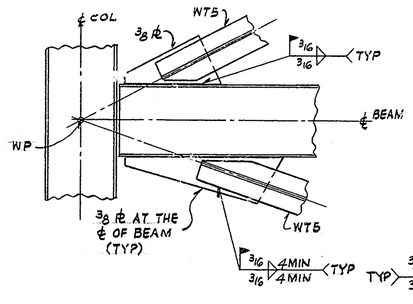

DETAIL '24'

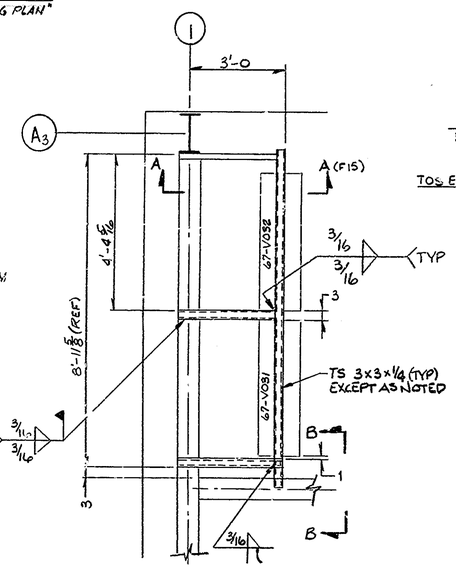

3 HEATER SUPPORT STEEL

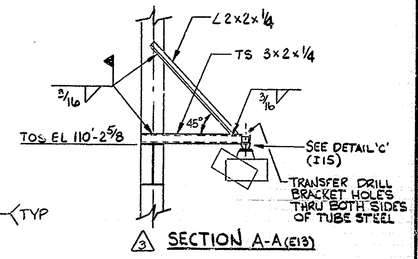

3 SECTION A-A (E13)

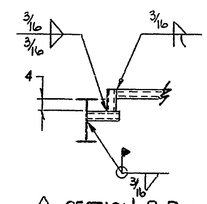

3 SECTION B-B (G14)

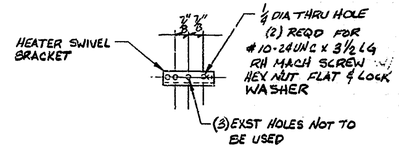

3 DETAIL 'C'

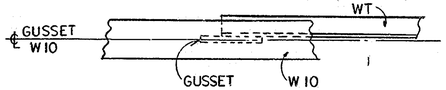

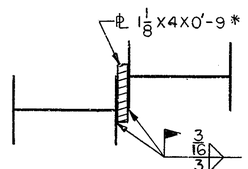

* THICKNESS MAY BE PROVIDED UTILIZING 2 PLATES STEPPED & WELDED BY 3/16 FILLETS.

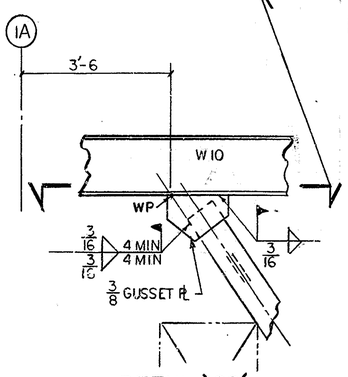

DETAIL '29'

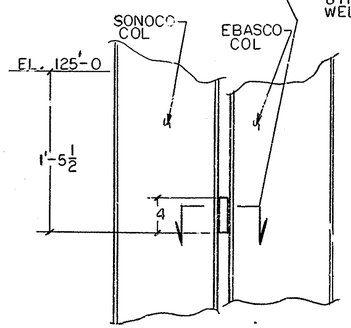

DETAIL '27'

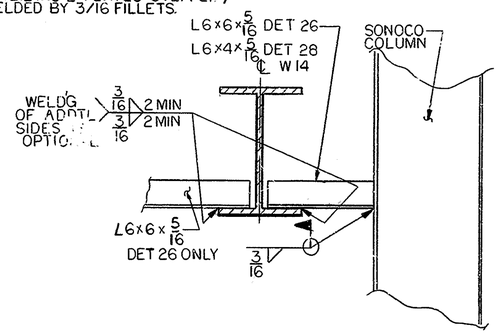

DETAIL 26 & 28

WVNS APPROVAL

COG. MGR.	
COG. ENGR.	
DRFT. SUPR.	7/13/89
Q.A. MGR.	
R&S MGR.	

FOR DRAWING INDEX SEE DRAWING NO. _____

APPRVD WVNS CO.		EBASCO SERVICES INCORPORATED
PROJECT MGR	6/20/89	A/E O.F.S. NO. 2388 TASK ORDER 009
ENGINEER SUPV	6/20/89	FOR WEST VALLEY NUCLEAR SERVICES COMPANY, INC WEST VALLEY, NEW YORK
LEAD DISC. ENGR	6/20/89	WEST VALLEY DEMONSTRATION PROJECT
DESIGN R. PARE	6-20-89	VITRIFICATION FACILITY
CHECKED H. GOELZ	6-20-89	BRACING DETAILS - SH. 2
DRAWN E. V. SEKERKA	DATE 6-20-89	
DE-AC07-81NE44139 PROJECT NO.		SIZE D; INDEX CODE NUMBER: AREA, DR. TYP, CL, ORIG; DRAWING NO. 905-D-729; REV. 3
19-CWV-G2275 SUBCONTRACT NO.		
ISSUED FOR CONSTRUCTION		SCALE NONE; SPEC. CODES; A/E SHEET NO. 905-D-729 A