VERIFY ALL DOCUMENTS FOR CURRENT REVISION AND PENDING CHANGES PRIOR TO EACH USE.
INIT_____ DATE_____

-D-719

REV NO	DATE	REVISION	DR	CH	APPROVED		
~~8~~	~~6-30-93~~	REVISED AS CIRCLED AND PER EBAR #1216	V.S.				
0	7/13/89	ER 1046					
9	5/13/94	PER FCN VF-2B-2057	AAJ	DRS	MEM		
2	1-22-90	REV. PER ECN 3419	GW	DRS	VAD		
3	4-11-90	REV. PER ECN 3523	GW	DRS	VAD		
4	9-4-90	REV. PER FCN VF-2A-006G	GW	DRS	SM		
5	5-14-91 5-22-91	PER: FCN VF-2A-134, 232 & 233	JH GW	DRS	SM		
6	7/31/91	PER: FCN VF 2A-538	JH	DRS	SM		
7	3-3-92	REV PER ECN 4959	MJC	HB	SM		
8	7-13-93	REV/FCN-VF-2B-1006	PD	DRS	MEM		

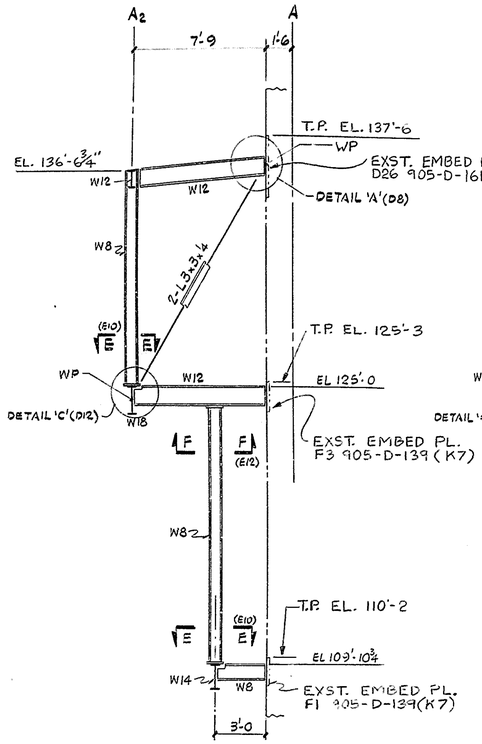

SECTION A-A
(905-D-712 & 713/A10 & D-714/B10)
¼" = 1'-0

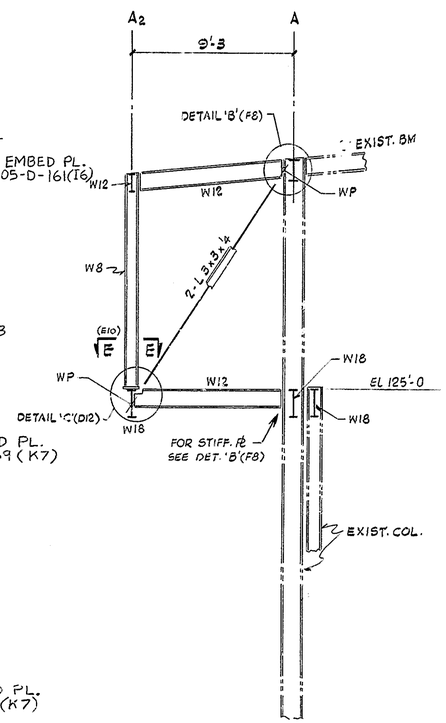

SECTION B-B
(905-D-713/A8 & D-714/B8)
¼" = 1'-0

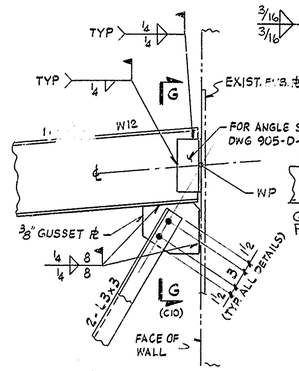

DETAIL 'A' (B3)

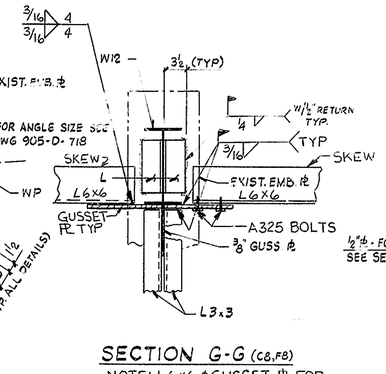

SECTION G-G (C8,F8)
NOTE: L6x6 & GUSSET PL FOR DETAIL 'B' ONLY

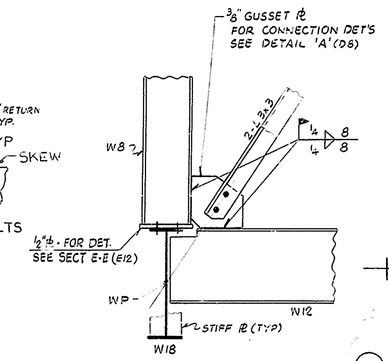

DETAIL 'C' (D1,D4)

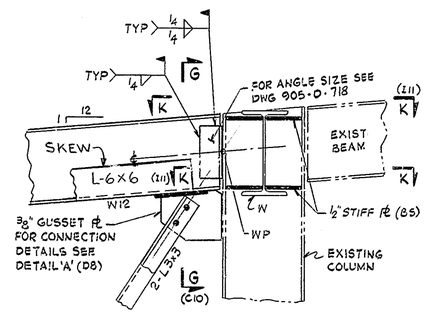

DETAIL 'B' (B5)

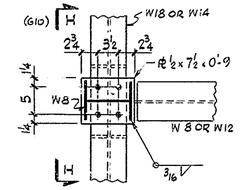

SECTION E-E (C1,C4,E2)

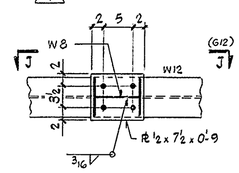

SECTION F-F (D2)

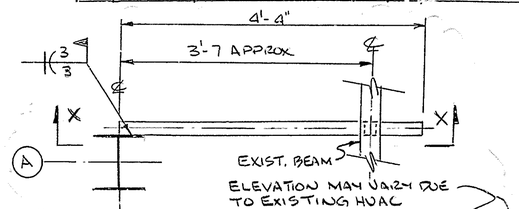

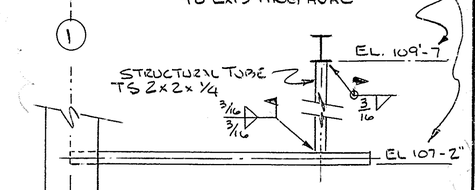

SECTION X-X
FRAMING DETAIL FOR DOOR D-16
SEE DWG 905-D-733(D2) FOR LOCATION OF DOOR DIG

THIS DWG IS PART OF CS-139 AS NOTED AT COORD. I14

NOTES:
1. FOR GENERAL NOTES SEE DWG 905-D-710
2. FOR STANDARD BEAM CONNECTIONS SEE DWG 905-D-718.

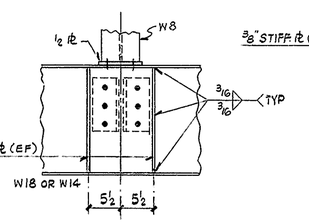

ELEV H-H (D10)

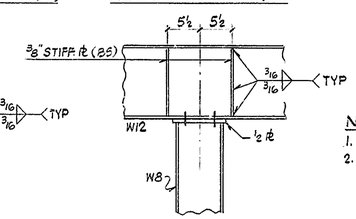

ELEV J-J (D13)

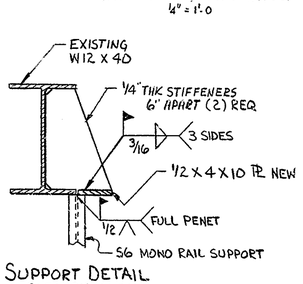

SUPPORT DETAIL
905D-713 (D7)
(NTS)

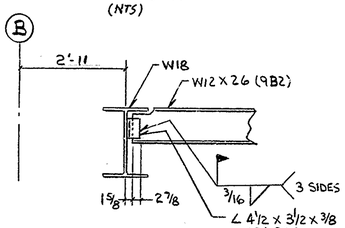

NOTE: FOR WELDING NOT SHOWN REFER TO TYP CONN DETAILS

CONNECTION DETAIL
905D-713 (D8)
(NTS)

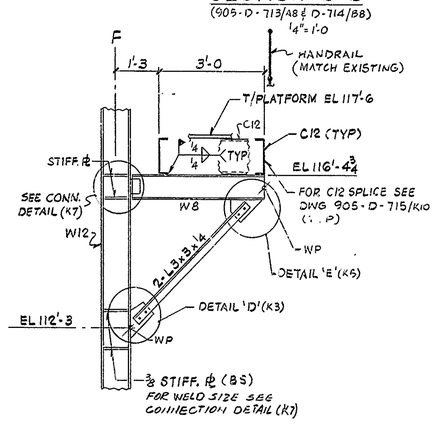

SECTION D-D
(905-D-712/K1)
½" = 1'-0

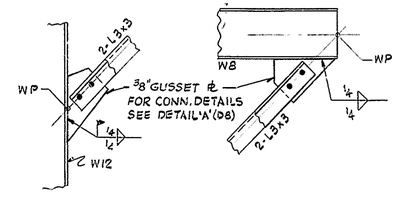

DETAIL 'D' (H4) DETAIL 'E' (H5)

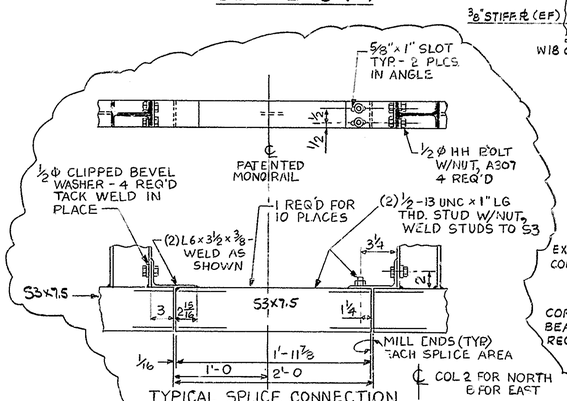

TYPICAL SPLICE CONNECTION
SCALE: NONE

ELEV

SECTION

BRACKET TO FLG OF NEW COLUMN

CONNECTION DETAIL (G3)

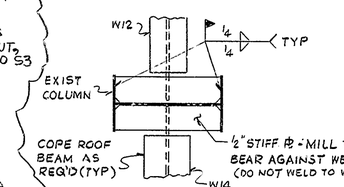

SECTION K-K (E8,E9)
NTS

BY CS-139, SEE WVNS EGL-005 DATA SHEET No. 170

NOTE: MONORAIL SUPPORT STEEL S6x17.25 MAY BE LOCATED ±6" TO AVOID FIELD INTERFERENCES. THE FLANGE SUPPORT STEEL, SEE 'SUPPORT DETAIL' (H1), IS TO BE LOCATED WITH MONORAIL SUPPORT STEEL.

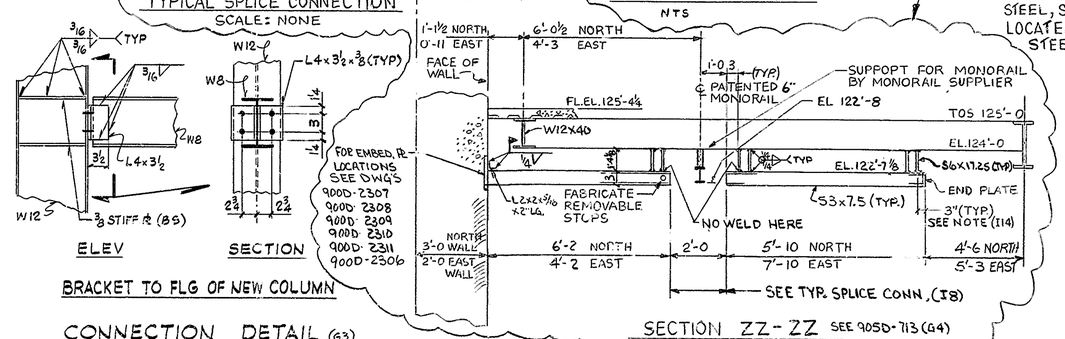

SECTION ZZ-ZZ SEE 905D-713 (G4)
(TYPICAL 4 PLACES NORTH)
(TYPICAL 6 PLACES EAST)
SCALE: NONE

REFERENCE DRAWINGS:

VF - PLATFORM FRAMING AT EL 110'-3 - PLAN	905-D-712
VF - PLATFORM FRAMING AT EL 125'-4¼ - PLAN	905-D-713
VF - ROOF FRAMING AND DETAILS	905-D-714
VF - FRAMING CONNECTION DETAILS	905-D-718
VF - WALL PENET. EL. 100'-0 TO 122'-0 SH. 2	905-D-139
VF - ROOF FRAMING DETAILS SH. 2	905-D-715

WVNS APPROVAL
COG. MGR. V. Desiano
COG. ENGR.
DRFT. SUPR. 7/13/89
Q.A. MGR. D.L.S.
R&S MGR.

FOR DRAWING INDEX SEE DRAWING NO.

APPRVD WVNS CO.		EBASCO SERVICES INCORPORATED A/E O.F.S. NO. 2388 TASK ORDER 009 FOR WEST VALLEY NUCLEAR SERVICES COMPANY, INC WEST VALLEY, NEW YORK
PROJECT MGR	12-9-88	
ENGINEER SUPV D.A. NUTA	12-9-88	
LEAD DISC ENGR D.A. NUTA	12-9-88	WEST VALLEY DEMONSTRATION PROJECT
DESIGN R. VARASHULAMS	12-9-88	VITRIFICATION FACILITY
CHECKED M. HRABOWSKA	12/6/88	FRAMING DETAILS
DRAWN V. SEKERKA	DATE 12-5-88	

DE-AC07-81NE44139 PROJECT NO.	SIZE	INDEX CODE NUMBER				DRAWING NO.	REV.
		AREA	DR. TYP	CL	ORIG	905-D-719	9
19-CWV-02275 SUBCONTRACT NO.	D						
ISSUED FOR CONSTRUCTION	SCALE 1"=1'-0 U.N.		SPEC. CODES			A/E SHEET NO. 905-D-719 B	