VERIFY ALL DOCUMENTS FOR CURRENT REVISION AND PENDING CHANGES PRIOR TO EACH USE.
INIT_____ DATE_____

905-D-717

REV NO	DATE	REVISION	DR	CH	APPROVED		
~~B~~	~~6-30-89~~	~~REVISED AS CIRCLED & PER EBAR 1210~~					
0	7/13/89	ER 046					
1	10/13/89	ECN3194	LR	KMG	VAD		
2	1-22-90	REV PER ECN 3419	GW	DRS	VAD		
3	9-5-91	PER ECN VF 2A-3469 AND ECN 3608					

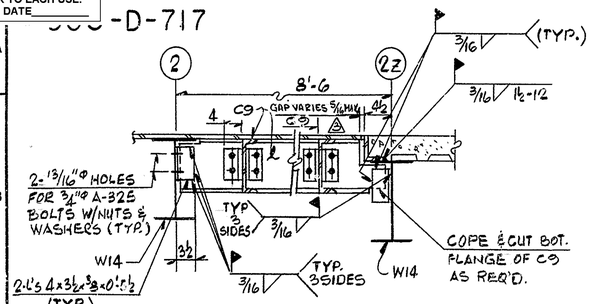

SECTION C-C 905-D-716 (K2)
NTS

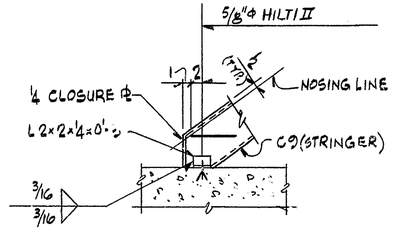

DETAIL '1' 905-D-716(E11,J10)
NTS

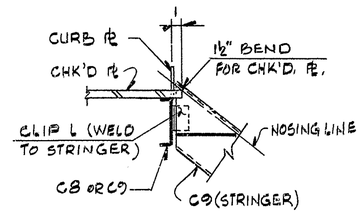

DETAIL '2' 905-D-716(C10,H10)
NTS

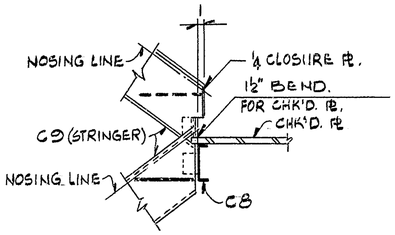

DETAIL '3' 905-D-716(C11)
NTS

NOTES:

1- FOR NOTES & REF DWGS SEE DWG. 905-D-716

2- FOR TYP. DET. OF CHK'D. PL ATTACHMENT TO STEEL SUPPORT SEE DWG. 905-D-722, K5

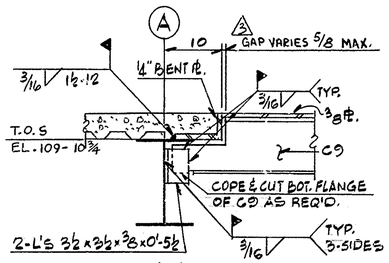

DETAIL '4' 905-D-716 (D9)
NTS

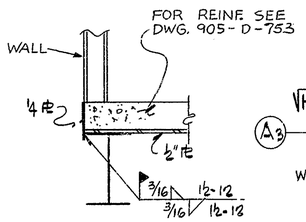

SECTION N-N 905-D-716(C2)
NTS

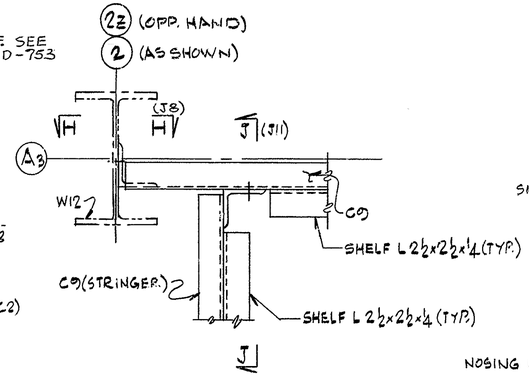

DETAIL '5' (AS SHOWN) 905-D-716 (E1)
DETAIL '6' (OPP. HAND) 905-D-716(E3)
NTS

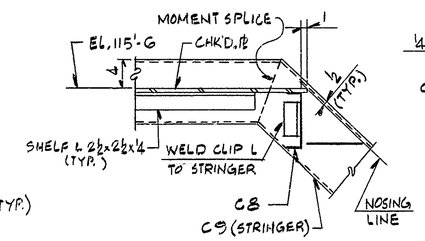

SECTION D1-D1 905-D-716(F2)
NTS

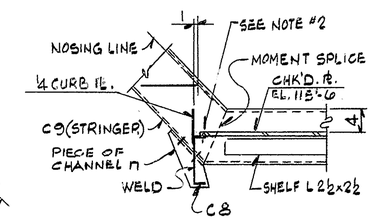

SECTION D2-D2 905-D-716(F2)
N.T.S.

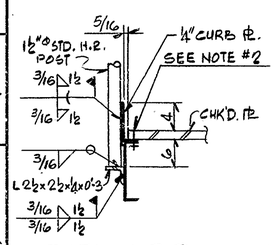

SECTION P-P 905-D-716(D6)
NTS

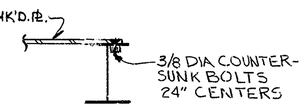

DETAIL '10' 905-D-716(C13)
NTS

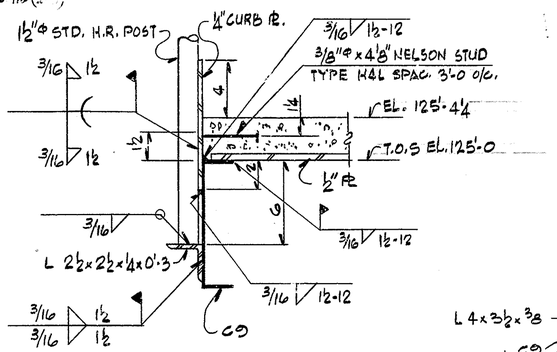

DETAIL '8' 905-D-716(D3)
NTS

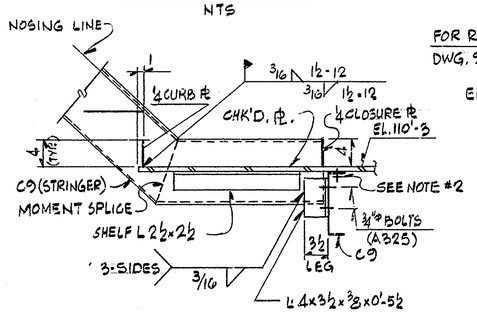

SECTION E1-E1 (AS SHOWN) 905-D-716(K2)
SECTION E2-E2 (OPP. HAND) 905-D-716(K2)
NTS

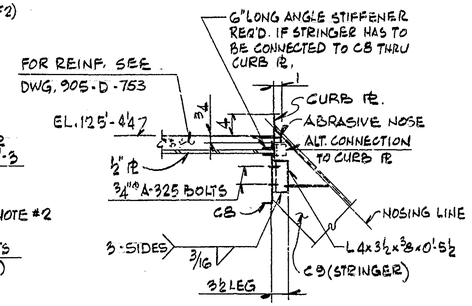

SECTION F1-F1 (AS SHOWN) 905-D-716(D2)
SECTION F2-F2 (OPP. HAND) 905-D-716(D2)
NTS

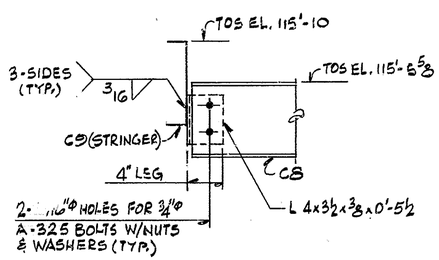

SECTION G-G 905-D-716(F1,F2)
1½"=1'-0

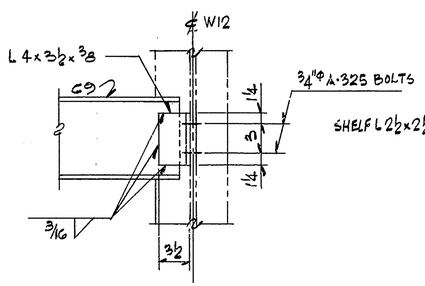

SECTION H-H (D6)
NTS

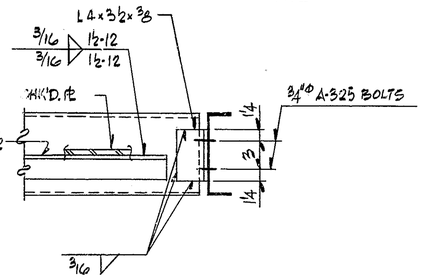

SECTION J-J (D7)
NTS

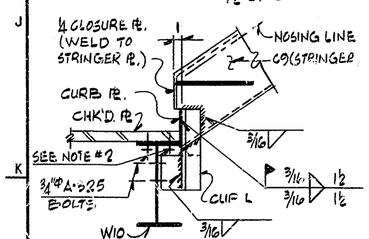

SECTION K1-K1 (AS SHOWN) 905-D-716(C6)
SECTION K2-K2 (OPP. HAND) 905-D-716(C6)
NTS

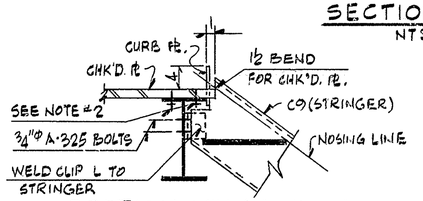

SECTION M1-M1 (AS SHOWN) 905-D-716 (H6)
SECTION M2-M2 (OPP. HAND) 905-D-716 (H6)
NTS

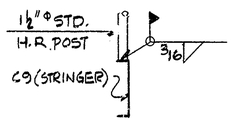

DETAIL '7' 905-D-716 (C3,D3,G3) (I1,I5,O7)
NTS

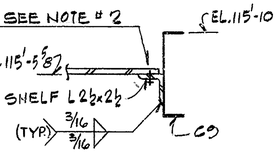

DETAIL '9' 905-D-716(C13)
NTS

WVNS APPROVAL
COG. MGR.
COG. ENGR.
DRFT. SUPR. 7/13/89
Q.A. MGR.
R.S. MGR.

FOR DRAWING INDEX SEE DRAWING NO.

APPRVD WVNS CO.	EBASCO SERVICES INCORPORATED A/E O.F.S. NO. 2388 TASK ORDER 000
PROJECT MGR.	FOR WEST VALLEY NUCLEAR SERVICES COMPANY, INC WEST VALLEY, NEW YORK
ENGINEER SUPV. DANUTA	WEST VALLEY DEMONSTRATION PROJECT VITRIFICATION FACILITY STAIRS - SECTIONS AND DETAILS SH 2
LEAD DISC ENGR DANUTA	
DESIGN K. PARASHURAMA 11-29-88	
CHECKED 11-15-88	
DRAWN E.M. GUARNIERI DATE 11-15-88	
DE-AC07-81NE44139 PROJECT NO.	SIZE D; INDEX CODE NUMBER: AREA, DR. TYP, CL, ORIG; DRAWING NO. 905-D-717; REV. 3
19-CWV-02275 SUBCONTRACT NO.	SPEC. CODES
ISSUED FOR CONSTRUCTION	SCALE AS NOTED; A/E SHEET NO. 905-D-717-B