VERIFY ALL DOCUMENTS FOR CURRENT REVISION AND PENDING CHANGES PRIOR TO EACH USE.
INIT_____ DATE_____

905-D-716

REV NO	DATE	REVISION	DR	CH	APPROVED		
~~B~~	~~6-30-89~~	REVISED AS CIRCLED & PER EBAR 1210					
0	7/13/89	ER 1646					
1	10/13/89	ECN 3114	LF		VAD		
2	1-22-90	REV. PER ECN 3449		DRS	VAD		
3	8-5-96	ECN 10175	LRP				

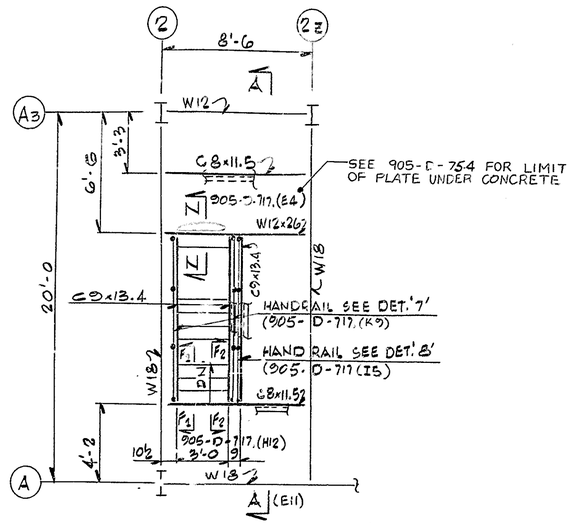

PART PLAN AT EL. 125'-4¼

TOS EL. 125'-0 UNLESS NOTED

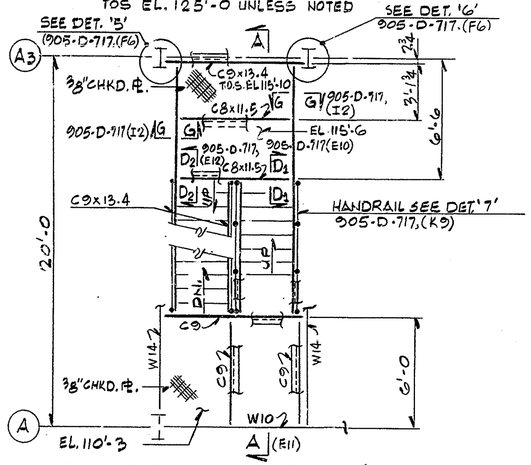

PART PLAN AT EL. 115'-6

TOS EL. 115'-5⅜ UNLESS NOTED

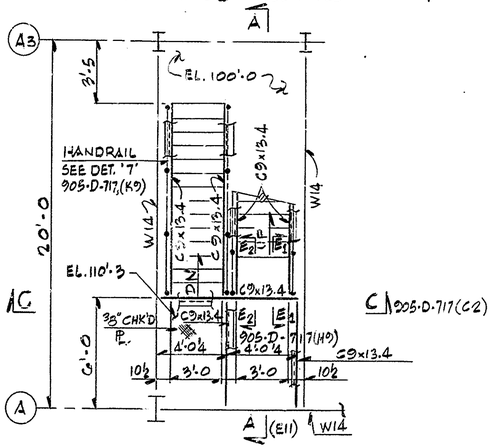

PART PLAN AT EL. 110'-3

T.O.S. EL. 110'-2⅝ UNLESS NOTED

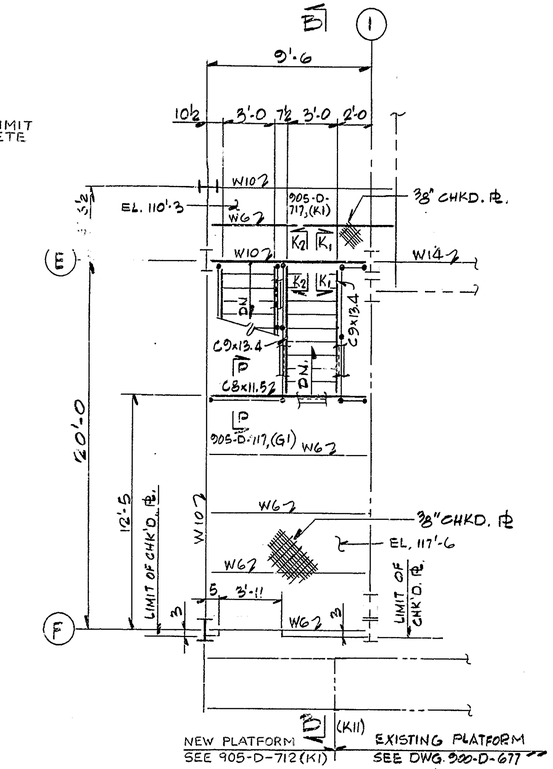

PART PLAN AT EL. 117'-6

T.O.S. EL. 117'-5⅝ UNLESS NOTED

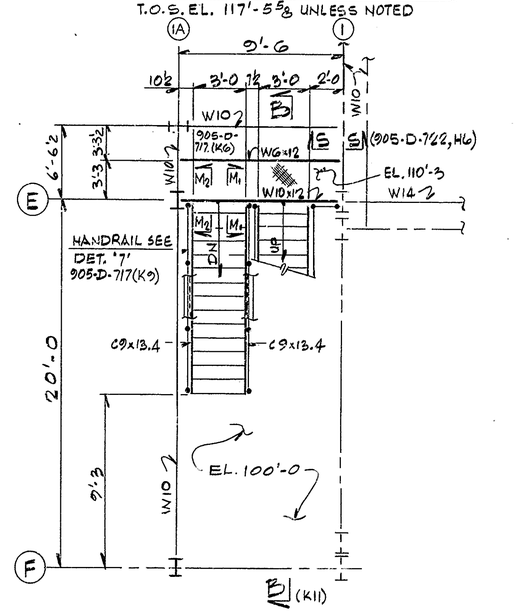

PART PLAN AT EL. 110'-3

T.O.S. EL. 110'-2⅝ UNLESS NOTED

NOTE: FOR BMS & BM SIZES NOT SHOWN SEE FRAMING PLAN

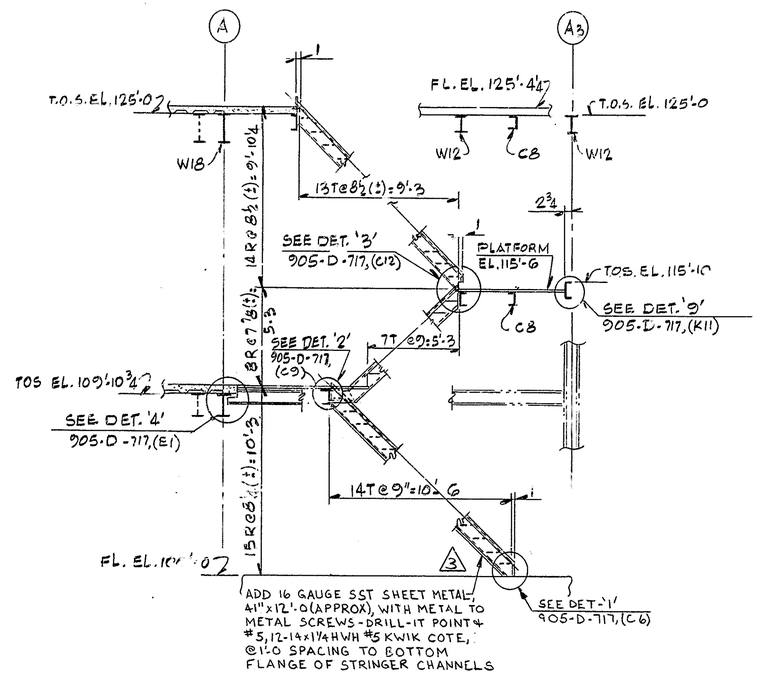

SECTION A-A (E2,H2,K2)

NOTES:

1. FOR GENERAL NOTES SEE DWG 905D-710

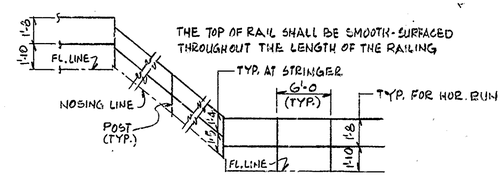

TYP. HANDRAIL LAYOUT

NTS

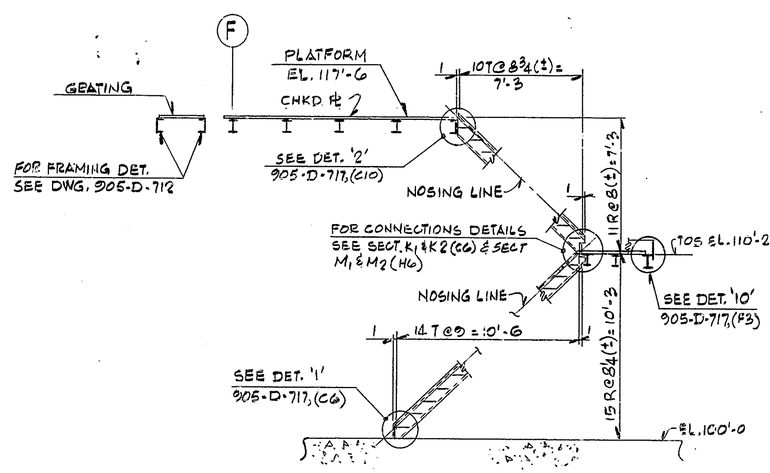

SECTION B-B (G6,K6)

REFERENCE DRAWINGS:

GENERAL ARRANGEMENT - V.F. PLAN EL. 100'-0	905-D-030
GENERAL ARRANGEMENT - V.F. PLAN EL. 110'-3	905-D-032
GENERAL ARRANGEMENT - V.F. PLAN EL. 124'-0 & ABOVE	905-D-034
V.F. PLAN EL. 100'-0 - SLAB ON GRADE, GRADE BMS & FTGS.	905-D-711
V.F. PLATFORM FRAMING PLAN AT EL. 110'-3	905-D-712
V.F. PLATFORM FRAMING PLAN AT EL. 125'-0	905-D-713
V.F. ROOF FRAMING PLAN	905-D-714
V.F. TYP. FRAMING CONNECTION DETAILS	905-D-718
V.F. MASONARY PLAN AT EL. 125'-4¼	905-D-754
V.F. CONTROL ROOM & ACCESS PLATFORMS	900-D-677
V.F. STAIRS - SECTIONS & DETAILS	905-D-716
V.F. STAIRS - SECTIONS & DETAILS	905-D-717

FOR DRAWING INDEX SEE DRAWING NO. _____

APPRVD WVNS CO.		EBASCO SERVICES INCORPORATED A/E O.F.S. NO. 2388 TASK ORDER 009
PROJECT MGR		FOR WEST VALLEY NUCLEAR SERVICES COMPANY, INC WEST VALLEY, NEW YORK
ENGINEER SUPV	11/29/88	
LEAD DISC ENGR	11/29/88	WEST VALLEY DEMONSTRATION PROJECT
DESIGN	11-29-88	VITRIFICATION FACILITY
CHECKED		STAIRS - SECTIONS AND DETAILS SH 1
DRAWN S.M. GUARNIERI	DATE 11-15-88	
PROJECT NO. DE-AC07-81NE44139		SIZE D; INDEX CODE NUMBER: AREA / DR. TYP / CL / ORIG; DRAWING NO. 905 D-716; REV. 3
SUBCONTRACT NO. 19-CWV-02275		
ISSUED FOR CONSTRUCTION		SCALE 1/4"=1'-0 U.N.; SPEC. CODES; A/E SHEET NO. 905-D-716 B

WVNS APPROVAL
COG. MGR.
COG. ENGR.
DRFT. SUPR.
Q.A. MGR.
R&S MGR.