VERIFY ALL DOCUMENTS FOR CURRENT REVISION AND PENDING CHANGES PRIOR TO EACH USE.
INIT_____ DATE_____

5-D-711

REV NO	DATE	REVISION	DR	CH	APPROVED		
~~8~~	~~6-20-89~~	~~GENERAL REVISION~~	~~VS~~	~~SC~~	~~[illegible]~~	~~[illegible]~~	~~[illegible]~~
0	7/13/89	ER 1646			[illegible]		
1	10/17/89	ECN 3194	LR	KMQ	VAD		
2	1-18-90	REV PER ECN 3419	GW	DRS	VAD		
3	7-10-90	REV. PER ECN 3687	GW	DRS	[illegible]		
4	9-5-90	REV. PER FCN VF-2A-017	RBH	HB3	[illegible]		
5	5-14-91	PER: FCN VF-2A-072	HH	HAB	[illegible]		

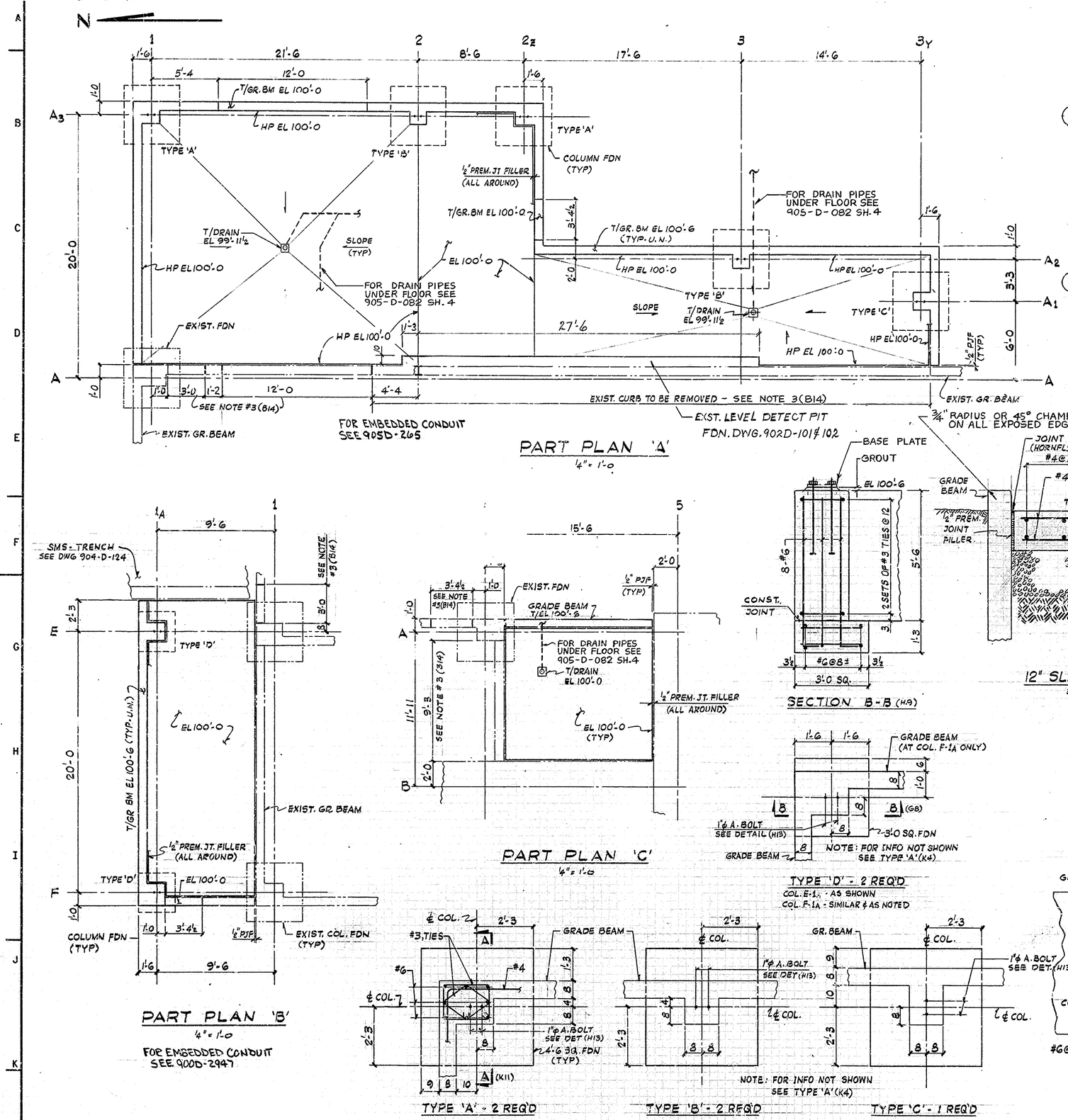

PART PLAN 'A'
1/4" = 1'-0

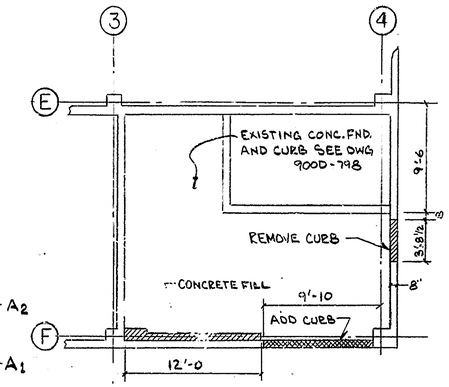

PART PLAN 'D'

NOTES:
1. FOR GENERAL NOTES SEE DWG 905D-710
2. FOR FLOOR DRAIN SEE DWG 905-D-082 S04.
3. REMOVE EXISTING CURB AND BURN ALL EXPOSED REBARS MINIMUM ONE INCH BELOW TOP OF CONCRETE AND REPAIR CONCRETE PER SPECIFICATION.
4. 1/2 PJF SHOWN ON THIS DWG, SHALL BE ASPHALT EXPANSION JOINT FILLER CONFORMING TO ASTM D-994. (5)

REFERENCE DRAWINGS:

V.F. - G A - PLAN AT EL 100'-0	905-D-030
SMS - TRENCH IN VITRIFICATION FACILITY	904-D-124
V.F. - DRAIN PIPING	905-D-082 S04 & S05
V.F. - FIRE PROTECTION PIPING	905-D-091 SH3
V.F. - NEW COL. SCHEDULE & FRAMING DETAILS	905-D-721

PART PLAN 'B'
1/4" = 1'-0
FOR EMBEDDED CONDUIT SEE 900D-2947

PART PLAN 'C'
1/4" = 1'-0

SECTION B-B (H9)

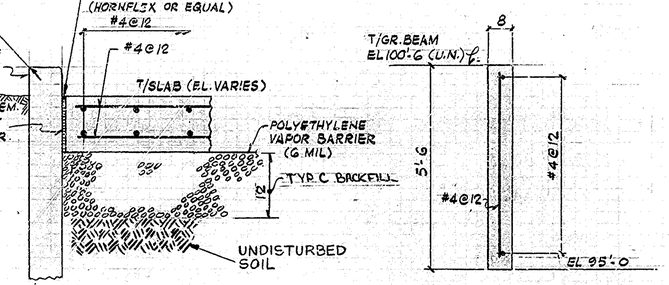

12" SLAB DETAIL
3/4" = 1'-0

GRADE BEAM - TYP. SECTION

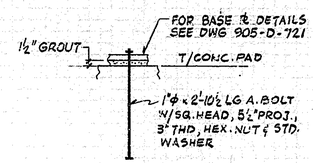

ANCHOR BOLT DETAIL - 14 REQ'D
NTS

TYPE 'D' - 2 REQ'D
COL. E-1A - AS SHOWN
COL. F-1A - SIMILAR & AS NOTED

TYPE 'A' - 2 REQ'D
TYPE 'B' - 2 REQ'D
TYPE 'C' - 1 REQ'D

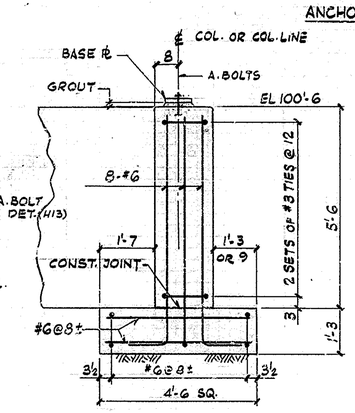

SECTION A-A (K5)
(FOR FDN TYPE A, B & C)

COLUMN FOUNDATION DETAILS
(FOR ORIENTATION SEE PART PLANS)

WVNS APPROVAL
COG. MGR. [illegible]
COG. ENGR. [illegible]
DPCT. SUPR. [illegible] 7/1/89
Q.A. MGR. [illegible]
R&S MGR. [illegible]

FOR DRAWING INDEX SEE DRAWING NO.

APPRVD WVNS CO.		EBASCO SERVICES INCORPORATED A/E O.F.S. NO. 2388 TASK ORDER 002
PROJECT MGR [illegible]	10/3/88	FOR WEST VALLEY NUCLEAR SERVICES COMPANY, INC WEST VALLEY, NEW YORK
ENGINEER SUPV [illegible]	10/3/88	
LEAD DISC ENGR [illegible]	10/3/88	WEST VALLEY DEMONSTRATION PROJECT VITRIFICATION FACILITY PLAN AT EL. 100'-0 SLAB ON GRADE, GRADE BEAMS AND FOOTINGS
DESIGN R. PARASHURAMA	10/3/88	
CHECKED M. HRABOWSKA	10/3/88	
DRAWN V. SEKERKA	DATE 9-30-88	
DE-AC07-81NE44139 PROJECT NO.		SIZE D; INDEX CODE NUMBER (AREA, DR. TYP, CL, ORIG); DRAWING NO. 905-D-711; REV. 5
19-CWV-02275 SUBCONTRACT NO.		
ISSUED FOR CONSTRUCTION		SCALE 1/2" = 1'-0 U.N.; SPEC. CODES; A/E SHEET NO. 905-D-711 8