VERIFY ALL DOCUMENTS FOR CURRENT REVISION AND PENDING CHANGES PRIOR TO EACH USE.
INIT_____ DATE_____

905-D-529

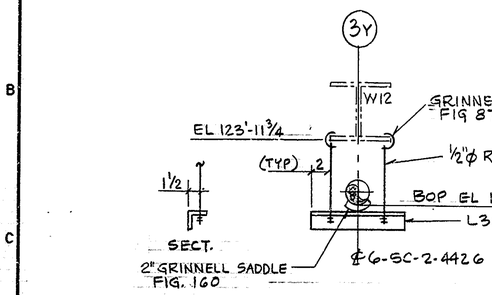

S-88-3-32 (C5)

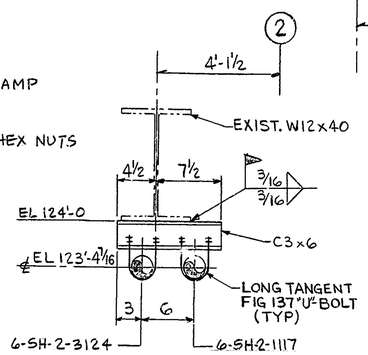

S-86-1-19 (C3)
S-86-1-20 (E5)

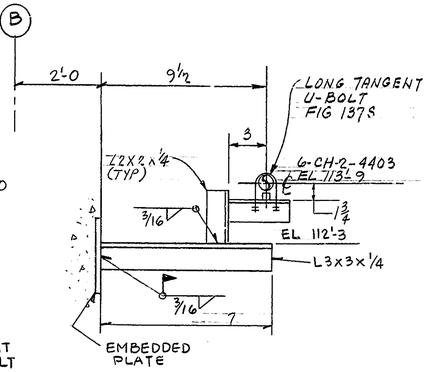

ELEVATION
S-92-1-4 (J9)

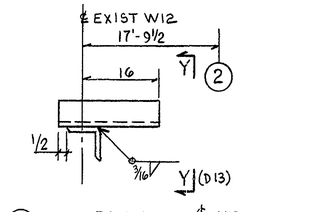

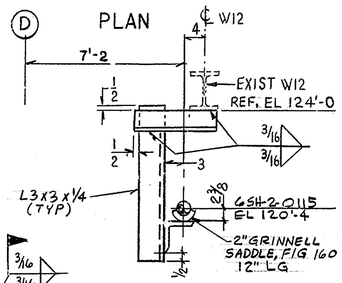

SECT Y-Y (B12)
S-86-1-38 (J9)

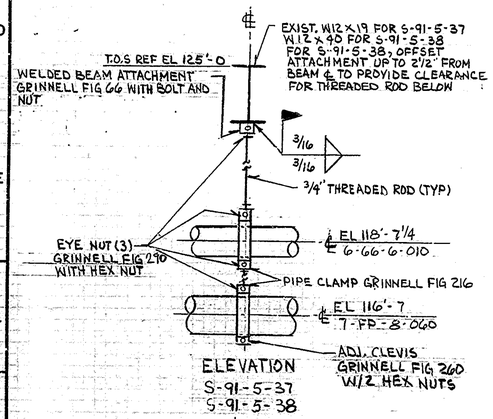

ELEVATION
S-91-5-37
S-91-5-38

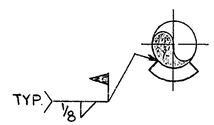

TYPICAL SADDLE DETAIL
GRINNELL FIG 160 SADDLE – UNLESS OTHERWISE NOTED, ALL SADDLES TO BE 6" LONG, INSTALLED SYMMETRICALLY ABOUT SUPPORT MEMBER.

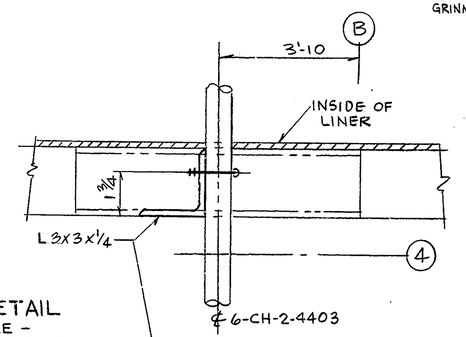

PLAN

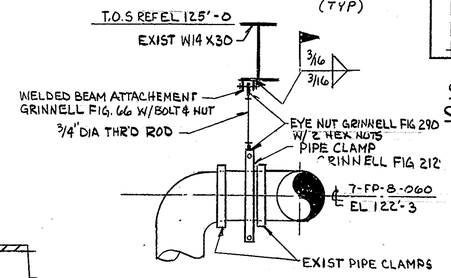

ELEVATION
S-91-5-39

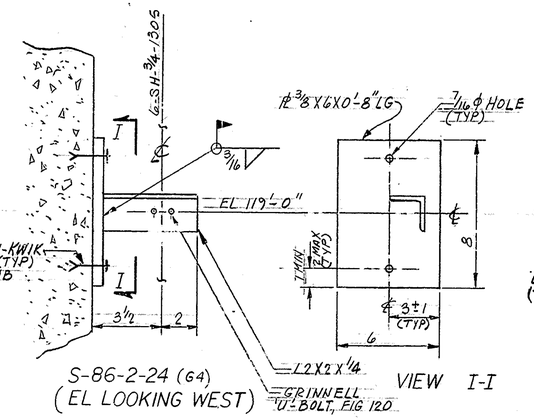

S-86-2-24 (G4)
(EL LOOKING WEST)
VIEW I-I

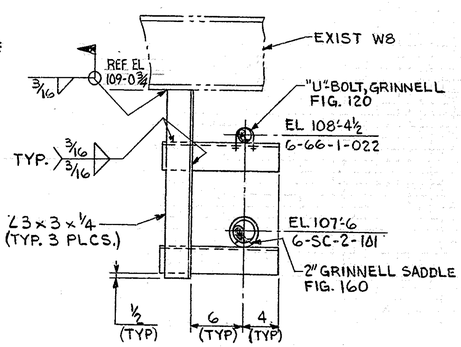

ELEVATION (LOOKING NORTH)
S-91-9-11 (E10)
S-91-9-12 (E11)

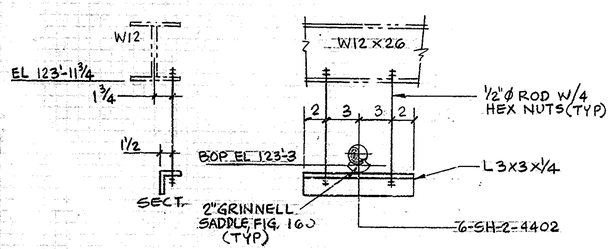

S-88-3-35 (E9)

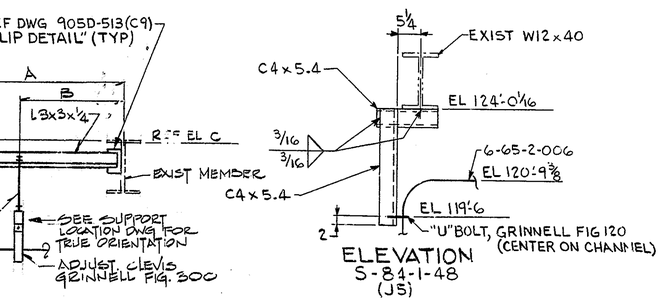

ELEVATION
S-84-1-48
(J5)

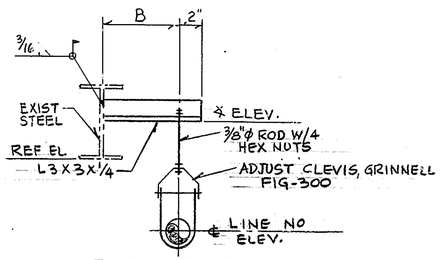

ELEVATION

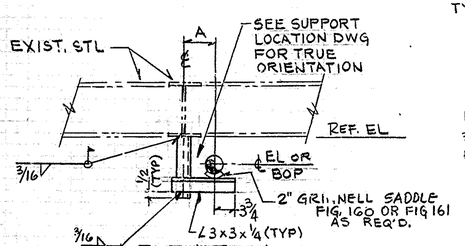

ELEVATION

SUPPORT NO.	ZONE	LINE NO.	℄ EL OR BOP EL	DIM. "A"	EXIST. STEEL	REF. EL
S-87-4-26	D7	6SC-1/2-063	BOP 123'-10	12	W12	123'-11 7/8
S-87-4-27	D1	6SC-1/2-063	BOP 123'-9 1/2	4	W12	123'-11 7/8
S-88-1-12	G7	6SH-2-4107	108'-3	4	W14	108'-8 7/8
S-86-1-39	F9	6SC-3-0108A	123'-3	8 3/4	W14	123'-10 1/8

SUPPT NO	ZONE	LINE NO	DIM	B DIM	REF EL C	REF EL D	℄ EL
S-86-1-22	(G4)	6-SH-3/4-1305	3'-8 1/2	21 1/2	125'-0	124'-8	123'-7

SUPPORT NO.	ZONE	LINE NO.	ELEV.	B	REF. EL	℄ EL. ELEV.
S-86-2-25	I12	6-SH-3/4-0305	108'-10	7 1/2	109'-0 3/4	109'-6 3/4
S-84-1-43	H3	6SC-1/2-056	123'-8	15 5/8	124'-0	124'-6

REV NO	DATE	REVISION	DR	CH	APPROVED		
B	~~6-30-89~~		JV	MJS	RJL	FTB	KEL
		REVISED AS CIRCLED					
0	7/19/89	E.R. 1650			MJA		
1	10-31-90	REV. PER ECN# 3982 3982A	DRS	HAB	DJR		
2	11-18-91	REV. PER ECN 4560	AWN	HAB	DJR		
3	1-2-92	REV. PER ECN 4755	MJC	HAB	DJR		
4	3-25-92	REV PER ECN 5009	CGR	HAB	DJR		
5	6-30-92	FCN VF-2B-0165	PD	HB	DJR		
6	7-27-92	REV/FCN VF-2B-0076	DRS	HB	DJR		
7	11-16-92	REV/ECN 5654	RMS	HB	HAJ		
8	12-17-92	REV/FCN VF-2B-0397	PD	HB	HAJ		
9	8-2-92	REV/FCN VF-2B-1031	PD	DRS	HAJ		
10	12-3-93	REV/FCN VF-2B-1417	PD	HB	HAJ		
11	12-16-93	REV/FCN VF-2B-1462	RMS	HB	HAJ		
12	3-23-94	REV. 2 FCN VF-2B-1781	WJC	HB	HAJ		
13	5-25-94	REV PER FCN VF-2B-2096	GW	HB	HAJ		
14	6-28-94	REV/FCN VF-2B-2014	RMS	DRS	HAJ		
15	7-26-94	REV/FCN VF-2B-2448	GW	ABA	HAJ		
16	8-9-94	REV/FCN VF-2B-2077	GW	ABA	HAJ		
17	8-11-94	REV/FCN VF-2B-2466	WJC	ABA	DJR		
18	8-15-95	REV/FCN TM-0812	RMS	KQ			
19	10-3-95	REV/ECN 9260	MJL	KQ			

FOR GENERAL NOTES & REFERENCE DRAWINGS SEE DRAWING 905-D-510

WVNS APPROVAL
COG. MGR.
COG. ENGR.
DRFT. SUPR.
Q.A. MGR.
R & S MGR.

FOR DRAWING INDEX SEE DRAWING NO.

APPRVD WVNS CO.		EBASCO SERVICES INCORPORATED A/E O.F.S. NO. 2398 TASK ORDER 009
PROJECT MGR.	5/4/89	FOR WEST VALLEY NUCLEAR SERVICES COMPANY, INC WEST VALLEY, NEW YORK
ENGINEER SUPV	5/4/89	
LEAD DISC ENGR	5/4/89	WEST VALLEY DEMONSTRATION PROJECT
DESIGN R.J. LEWKO	5/4/89	VITRIFICATION FACILITY
CHECKED C. AMMENDOLA	5/4/89	SUPPORT DETAILS
DRAWN J. VANNELLI	DATE 5/4/89	
PROJECT NO. DE-AC07-81NE44139		SIZE D; INDEX CODE NUMBER: AREA, DR. TYP, CL, ORIG; DRAWING NO. 905D-529; REV. 19
SUBCONTRACT NO. 19-CWV-02275		
ISSUED FOR CONSTRUCTION		SCALE NONE; SPEC. CODES; A/E SHEET NO. 905-D-529 B