VERIFY ALL DOCUMENTS FOR CURRENT REVISION AND PENDING CHANGES PRIOR TO EACH USE.
INIT_____ DATE_____

905-D-528

REV NO	DATE	REVISION	DR	CH	APPROVED		
B	~~6-20-93~~		JV	MS	RAL		
GENERAL REVISION REVISED AS CIRCLED							
0	7/19/89	ER 1649			HAJ		
7	9/26/94	FCN VF-2B-1-94	TMM	HB	HAJ		
2	7-1-92	FCN VF-2B-0150	FD	HB	DJR		
3	10-14-92	REV/FCN 5259	RMS	DRS	HAJ		
4	7-13-93	REV/FCN VF-2B-1159	RMS		HAJ		
5	12-14-93	REV/FCN VF-2B-1484	SRD		HAJ		
6	1-26-94	REV/FCN VF-2B-1657	JH	KQ	HAJ		

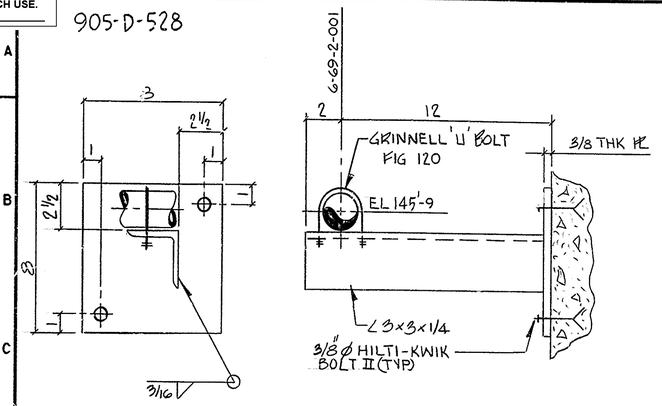

ELEVATION

S-91-8-1 (E1)
S-91-8-5 (F1)
S-91-8-6 (G1)

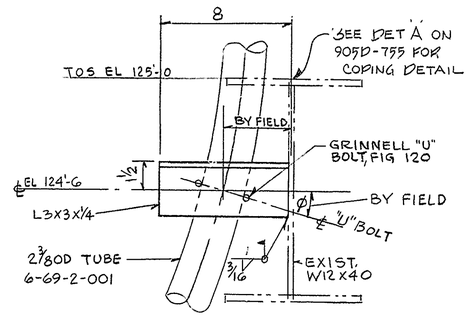

ELEVATION

S-91-8-3 (H11)

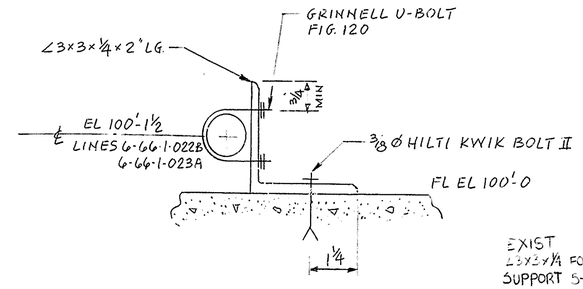

S-91-9-14
S-91-9-15
S-91-9-16
S-91-9-17

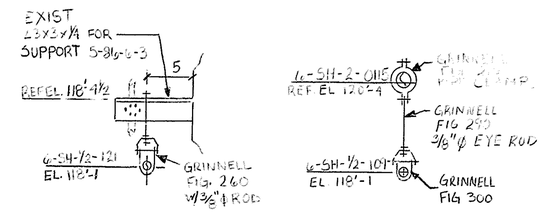

△7 S-86-1-43

△7 S-86-1-53

FOR GENERAL NOTES & REFERENCE DRAWINGS SEE DRAWING 905-D-510

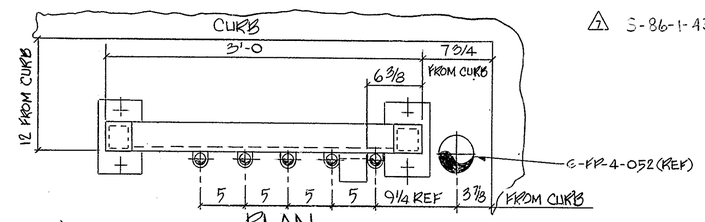

PLAN

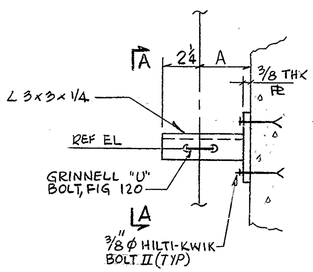

ELEVATION

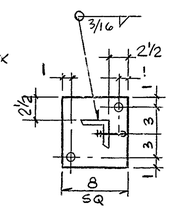

SECT A-A

SUPPORT NO	LINE NO	A	REF ELEV
S-91-8-4 (H9)	6-69-2-001	5 1/2	139'-6
S-91-13-3 (B6)	6-IA-3/4-043	4	105'-6

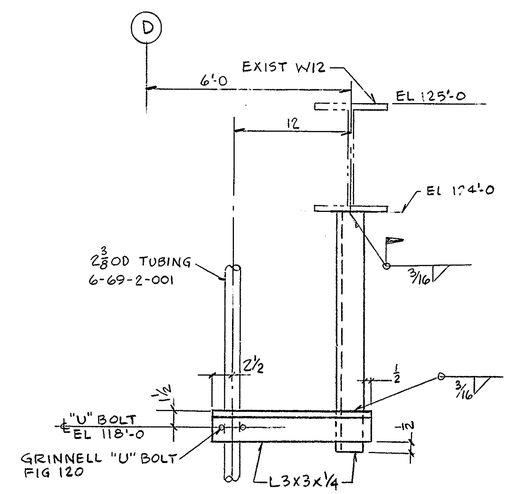

ELEVATION

S-91-8-2 (J9)

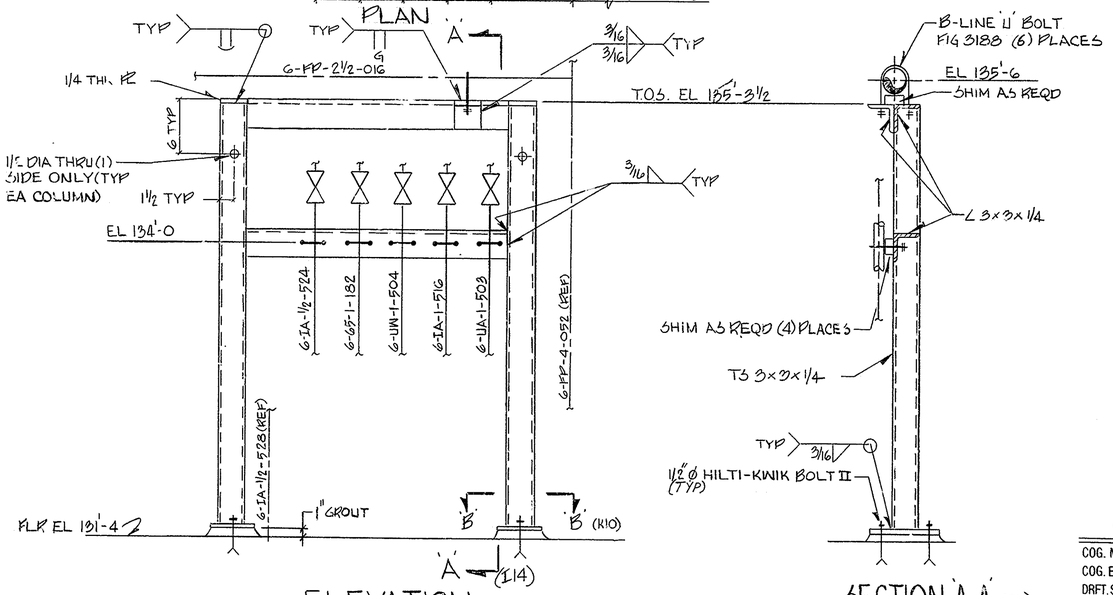

ELEVATION

S-77-08 (G12)

SECTION 'A-A' (I11)

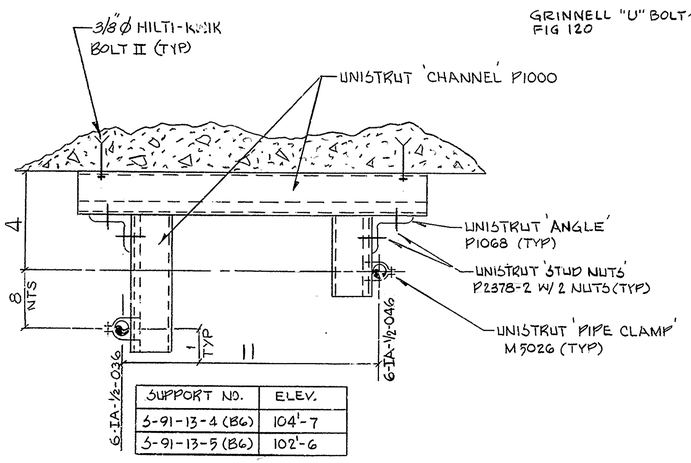

SUPPORT NO.	ELEV.
S-91-13-4 (B6)	104'-7
S-91-13-5 (B6)	102'-6

PLAN

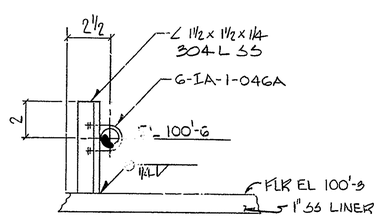

ELEVATION

S-91-13-6 (D5)

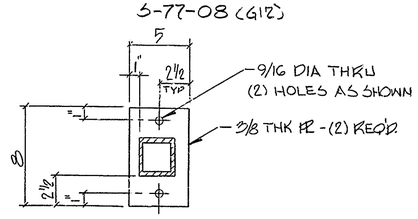

SECTION 'B-B' (I11)

WVNS APPROVAL
COG. MGR.
COG. ENGR.
DRFT. SUPR.
Q.A. MGR.
R & S MGR.

FOR DRAWING INDEX SEE DRAWING NO.

APPRVD WVNS CO.		EBASCO SERVICES INCORPORATED
PROJECT MGR	5/5/93	A/E O.F.S. NO. 2388 TASK ORDER 009
ENGINEER SUPV	5/5/93	FOR WEST VALLEY NUCLEAR SERVICES COMPANY, INC WEST VALLEY, NEW YORK
LEAD DISC ENGR	5/5/93	WEST VALLEY DEMONSTRATION PROJECT
DESIGN F.J. LEWKO	5/5/93	VITRIFICATION FACILITY
CHECKED A. VIRGO	5/5/93	SUPPORT DETAILS
DRAWN J. VANNELLI	DATE 5/5/93	
DE-AC07-81NE44139 PROJECT NO.		SIZE D; INDEX CODE NUMBER: AREA / DR. TYP / CL / ORIG; DRAWING NO. 905D-528; REV. 7
19-CWV-02275 SUBCONTRACT NO.		
ISSUED FOR CONSTRUCTION		SCALE NONE; SPEC. CODES; A/E SHEET NO. 905-D-528 B