VERIFY ALL DOCUMENTS FOR CURRENT REVISION AND PENDING CHANGES PRIOR TO EACH USE.
INIT_____ DATE_____

905-D-525

REV NO	DATE	REVISION	DR	CH	APPROVED
B	6/27/89		JJB	AV	RAL
		GENERAL REVISION AS CIRCLED			
0	7/19/89	ER1650			
1	10/26/90	REV. PER ECN 3940	CGR	HAB	DJR
2	6-18-91	REV. PER ECN 4300	CGR	HAB	DJR
3	8-17-92	REV PER ECN 5351	DRS	HB	
4	10-1-92	REV/FCN VF-2B-0352	PD	HB	DJR
5	3-4-93	REV PER ECN 5967	GW	HB	
6	6-16-93	REV/FCN VF-2B-0946	PD	DRS	HAJ
7	11-2-93	REV/FCN VF-2B-1459	PD	DRS	HAJ
8	12-14-93	REV/FCN VF-2B-1555	SRD	HB	HAJ
9	3-24-94	REV/FCN VF-2B-1766 & 1964	GW	HB	HAJ

'A'	'B'	'C'	'D'	'E'	'F'
S-85-5-	1 (D1)	6-CC-1½-033	130'	576-S23	3
S-85-5-	2 (D1)	6-CC-1½-029	129'	576-S23	3
S-85-1-	10 (H4)	6-CC-6-043	129'	575-S17	5½
S-85-1-	71 (H4)	6-CC-6-031	130'	575-S17	5½
S-85-3-	14 (A2)	6-CC-6-043	129'	575-S18	5½
S-85-3-	34 (A2)	6-CC-6-031	130'	575-S18	5½
S-85-3-	15 (D1)	6-CC-4-042	129'	575-S19	4
S-85-3-	35 (D1)	6-CC-6-031	130'	575-S19	5½
S-85-3-	36 (G2)	6-CC-4-032	130'	575-S20	4
S-85-3-	37 (G2)	6-CC-4-042	129'	575-S20	4
S-85-3-	17 (I3)	6-CC-1½-033	130'	575-S21	3
S-85-3-	38 (I[illegible])	6-CC-1½-041	129'	575-S21	3
S-85-3-	39 ([illegible])	6-CC-1½-033	130'	575-S22	3
S-85-3-	4[illegible]	[illegible]-CC-1½-041	129'	575-S22	3

EXIST SUPPORTS REWORK PER DWG 905D-524 (F14)

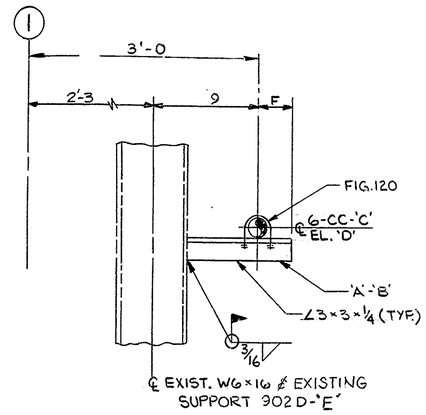

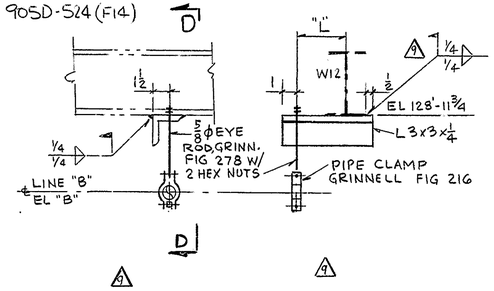

ELEVATION

SECTION D-D

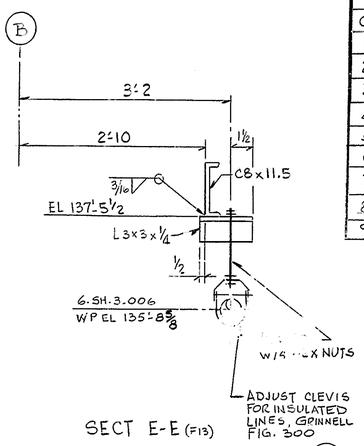

SECT E-E (F13)

SUPPORT No	ZONE	LINE No "A"	EL. "A"	LINE No "B"	EL "B"	"L"
S-85-4-16	J2			6-CC-3-114	128'-4¼	6
S-85-4-17	J2			6-CC-3-102	128'-4¼	6

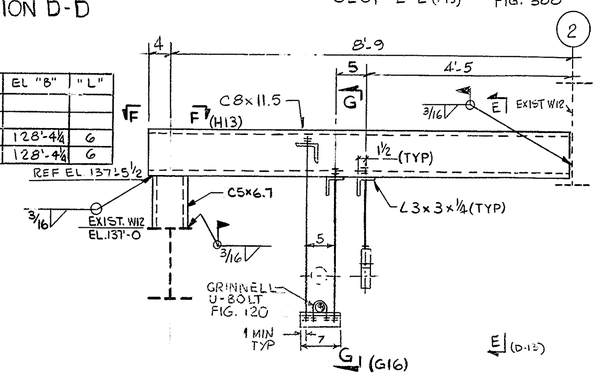

ELEVATION
S-85-3-25 (A-5)

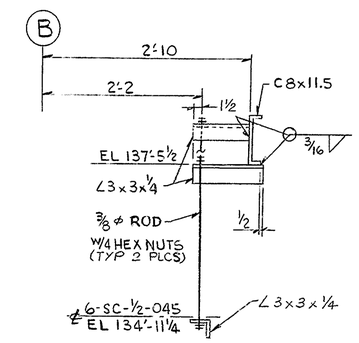

SECTION G-G (F12)

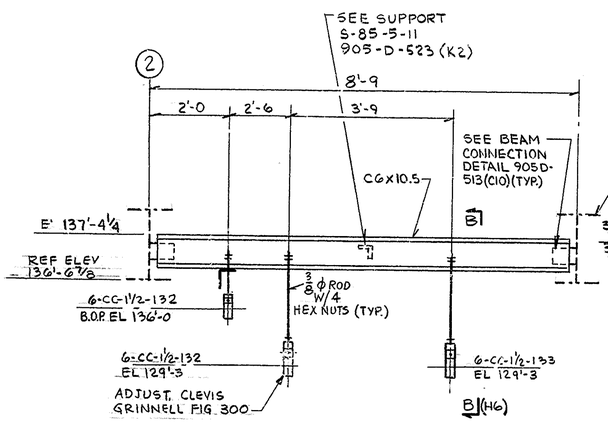

ELEVATION
S-85-5-5 (D5)

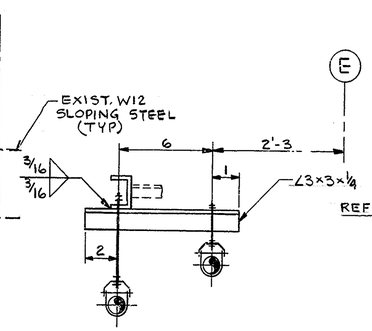

SECTION B-B (H4)

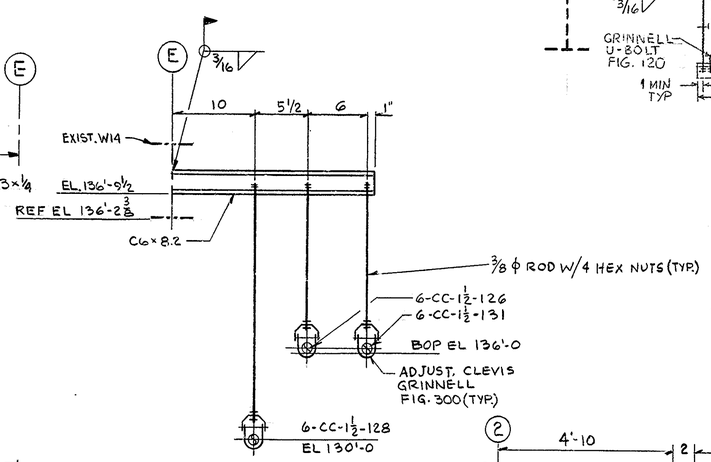

ELEVATION
S-85-5-8 (E3)

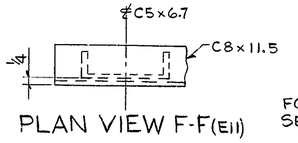

PLAN VIEW F-F (E11)

FOR GENERAL NOTES & REFERENCE DRAWINGS SEE DRAWING 905-D-510

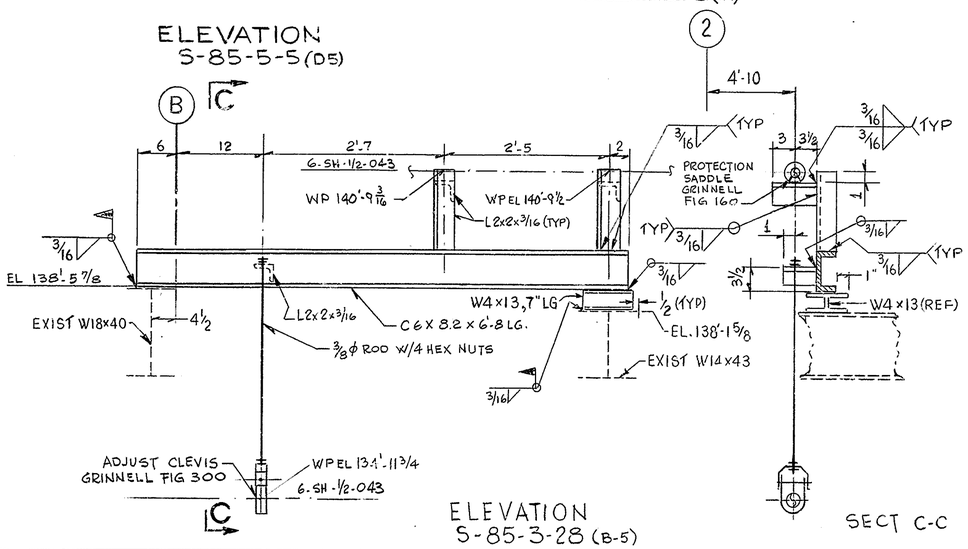

ELEVATION
S-85-3-28 (B-5)

SECT C-C

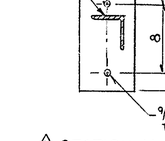

SECTION H-H (J11)

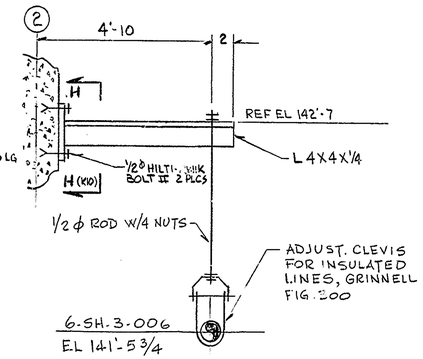

ELEVATION
S-85-3-26 (B-6)

FOR DRAWING INDEX SEE DRAWING NO.

WVNS APPROVAL
COG. MGR.
COG. ENGR
DRFT. SUPR.
Q.A. MGR.
R & S MGR.

APPRVD WVNS CO.		EBASCO SERVICES INCORPORATED A/E O.F.S. NO. 2388 TASK ORDER 009
PROJECT MGR	5/3/89	FOR WEST VALLEY NUCLEAR SERVICES COMPANY, INC WEST VALLEY, NEW YORK
ENGINEER SUPV	5/3/89	
LEAD DISC ENGR F J EMMER	5/3/89	WEST VALLEY DEMONSTRATION PROJECT
DESIGN RJ LEWKO	5/3/89	VITRIFICATION FACILITY
CHECKED A.T. VIRGO	5/3/89	SUPPORT DETAILS
DRAWN J. VANNELLI	DATE 5/3/89	
DE-AC07-81NE44139 PROJECT NO.		SIZE D; INDEX CODE NUMBER: AREA / DR. TYP / CL / ORIG; DRAWING NO. 905D-525; REV. 9
19-CWV-02275 SUBCONTRACT NO.		
ISSUED FOR CONSTRUCTION		SCALE NONE; SPEC. CODES; A/E SHEET NO. 905-D-525 B