VERIFY ALL DOCUMENTS FOR CURRENT REVISION AND PENDING CHANGES PRIOR TO EACH USE.
INIT_____ DATE_____

05-D-523

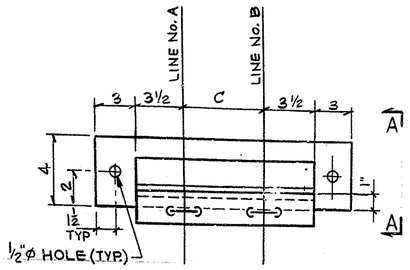

PLAN

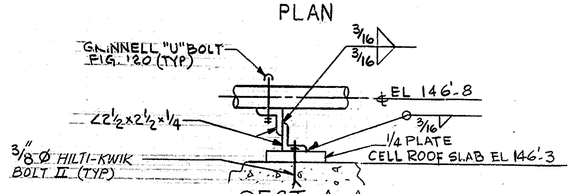

SECT A-A

SUPPORT	ZONE	LINE A	LINE B	DIM C
S-85-3-5	K-11	6-CC-3-103	6-CC-3-102	6
S-85-3-6	F-11	6-CC-3-109	6-CC-3-108	6
S-85-3-19	K-9	6-CC-3-103	6-CC-3-102	6
S-85-3-20	F-9	6-CC-3-109	6-CC-3-108	6
S-85-3-21	I-8	6-CC-3-115	6-CC-3-114	17
S-85-3-22	E-7	6-CC-3-121	6-CC-3-120	17
S-85-3-23	I-12	6-CC-3-103	6-CC-3-102	17
S-85-3-24	E-12	6-CC-3-109	6-CC-3-108	17

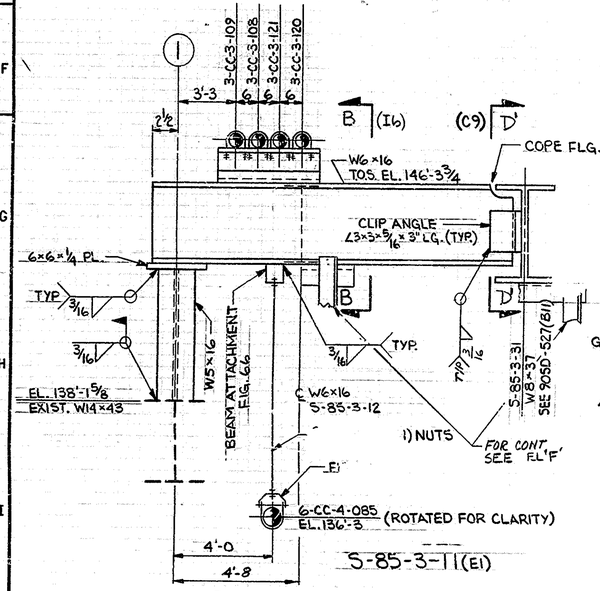

S-85-3-11 (E1)

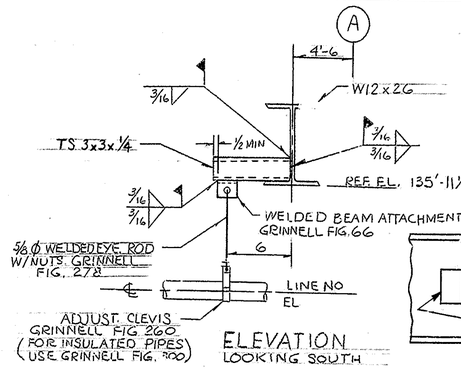

ELEVATION
LOOKING SOUTH

SUPPORT	ZONE	LINE NO.	EL
S-85-1-25	F7	6-CC-4-056	133'-3
S-85-1-27	F6	6-CC-4-055	133'-3
S-85-1-29	F5	6-CC-4-058	134'-1⅜
S-85-1-32	F4	6-CC-4-057	133'-3
S-85-1-34	F3	6-CC-4-060	134'-1⅜
S-85-1-42	F3	6-CC-4-059	133'-3

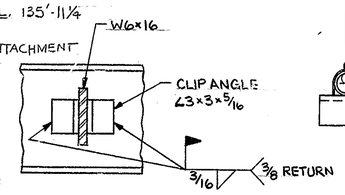

SECTION D-D (D8)
SECTION D'-D' (F4)

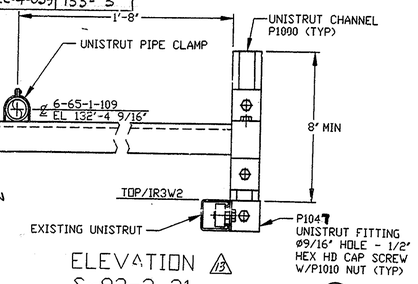

ELEVATION
S-92-2-21 (13)

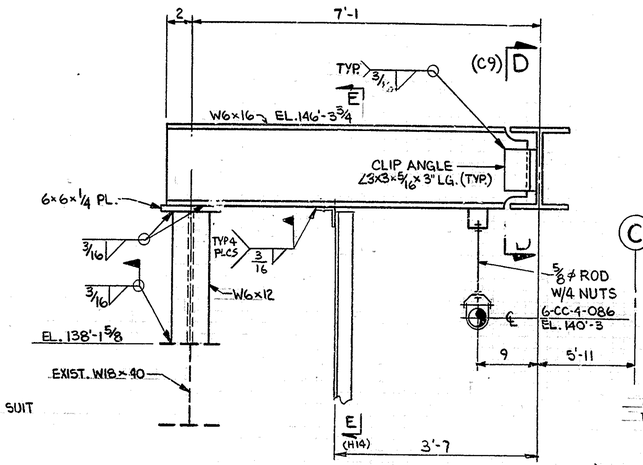

S-85-3-12 (D2)

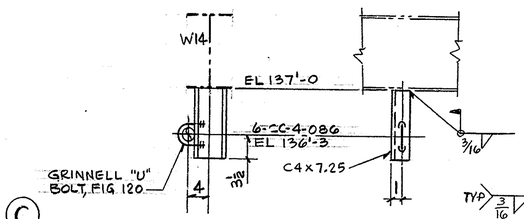

ELEVATION
S-85-3-13 (C2)

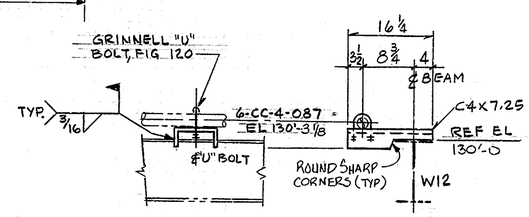

ELEVATION
S-85-4-2 (D9)
S-85-4-3 (D10)

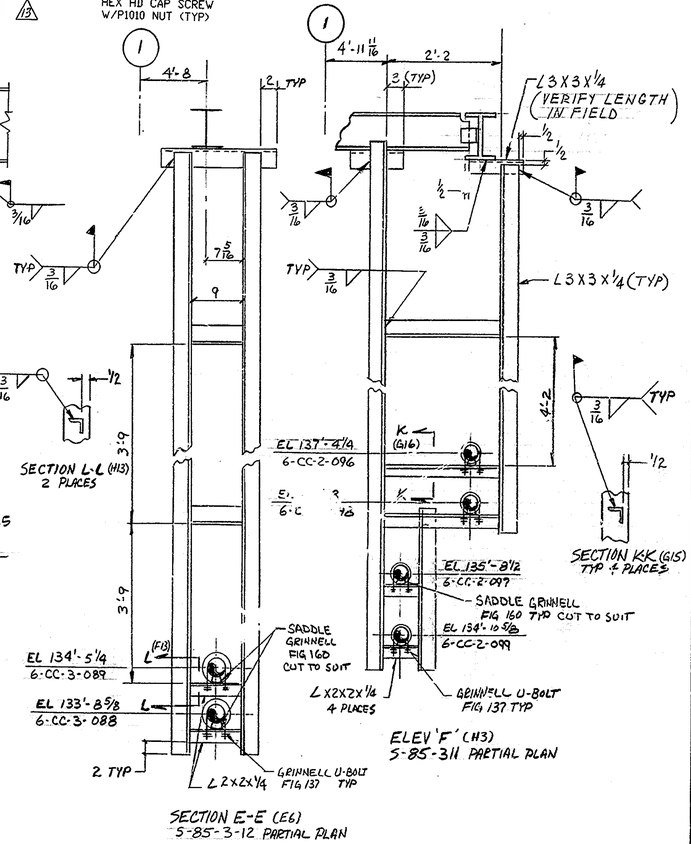

ELEV 'F' (H3)
S-85-3-11 PARTIAL PLAN

SECTION E-E (E6)
S-85-3-12 PARTIAL PLAN

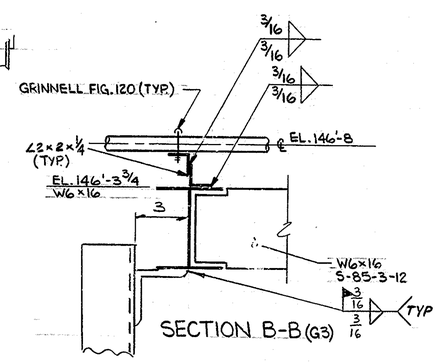

SECTION B-B (G3)

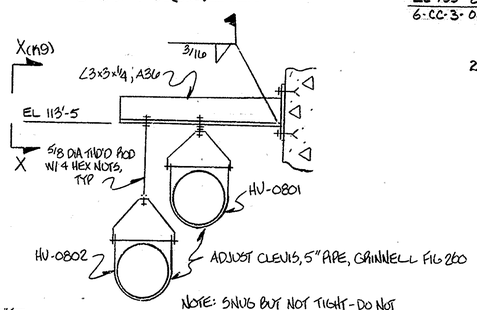

SUPPORT 5-89-2-40
ELEVATION

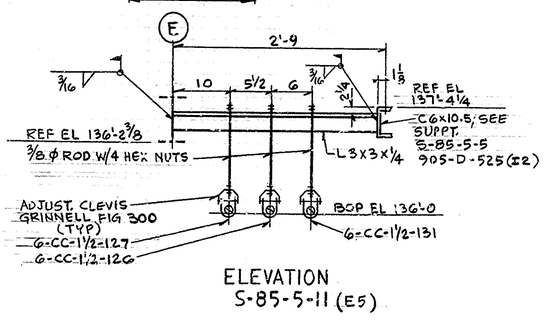

ELEVATION
S-85-5-11 (E5)

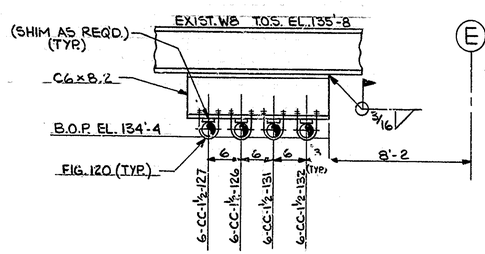

S-85-5-14 (G8)

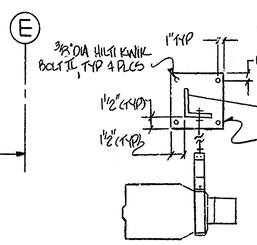

VIEW X-X ELEVATION (E10)

REV NO	DATE	REVISION	DR	CH	APPROVED
B	6/30/89	GENERAL REVISION AS CIRCLED	JB	RJL	RJL
0	7/19/89	ER1650			
13	4-3-96	REV. PER FCN TM-2169	BP	DRS	
2	8-14-92	REF PER ECN 5351	DRS	HB	
3	12-15-92	REV PER VF-2B-0425	HB	DRS	HAJ
4	2-5-93	REV/FCN VF-2B-0622	PD	DRS	HAJ
5	3-4-93	REV PER ECN 5961	GW	HB	
6	5-24-93	REV/FCN-VF-2B-0880	GW	KQ	HAJ
7	6-18-93	REVISED PER ECN 6433	SB	HB	
8	7-13-93	REV/FCN VF-2B-1159	RMS	DRS	HAJ
9	8-18-93	REV/FCN VF-2B-1273	RMS	KQ	HAJ
10	12-17-93	REV/FCN VF-2B-1614	SRD	HB	HAJ
11	3-30-94	REV/FCN-2B-1918 & 1904	WJL	HB	DJR
12	11-29-94	REV/FCN VF-2B-2816	MJL	CLP	

NOTE:
FOR GENERAL NOTES & REFERENCE DRAWING SEE DWG 905D-510

WVNS APPROVAL
COG. MGR.
COG. ENGR.
DRFT. SUPR.
Q.A. MGR.
R & S MGR.

FOR DRAWING INDEX SEE DRAWING NO.

APPRVD WVNS CO.		EBASCO SERVICES INCORPORATED
PROJECT MGR	5/31/89	A/E O.F.S. NO. 2388 TASK ORDER 009
ENGINEER SUPV	5/31/89	FOR WEST VALLEY NUCLEAR SERVICES COMPANY, INC WEST VALLEY, NEW YORK
LEAD DISC ENGR	5/31/89	WEST VALLEY DEMONSTRATION PROJECT
DESIGN	5/31/89	VITRIFICATION FACILITY
CHECKED	5/31/89	SUPPORT DETAILS
DRAWN	DATE 5/31/89	

DE-AC07-81NE44139 PROJECT NO.	SIZE	INDEX CODE NUMBER		DRAWING NO.	REV.
19-CWV-02275 SUBCONTRACT NO.	D	AREA / DR. TYP / CL / ORIG		905D-523	13
ISSUED FOR CONSTRUCTION	SCALE NONE	SPEC. CODES		A/E SHEET NO. 905-D-523	B