VERIFY ALL DOCUMENTS FOR CURRENT REVISION AND PENDING CHANGES PRIOR TO EACH USE.
INIT_____ DATE_____

905D-521

REV NO	DATE	REVISION	DR	CH	APPROVED
B	6-30-89		JV	MS	RDL
GENERAL REVISION REVISED AS CIRCLED					
0	7/19/89	ER1650			
12	12-29-95	ECN-9468	BP	DRS	
2	1-13-92	REV PER ECN 4755	MJC	HAB	DJR
3	12-14-92	REV PER VF-2B-0429	HB	DRS	HAJ
4	1-21-93	REV/FCN VF-2B-0552	PD	DRS	HAJ
5	7-13-93	REV/FCN VF-2B-1159 & FCN VF-2B-1180	RMS	DRS	HAJ
6	10-28-93	REV/FCN'S 1357 & 1397	GW	DRS	HAJ
7	12-1-93	REV/FCN VF-2B-1391	RMS	HB	HAJ
8	3-15-94	REV PER ECN 7631	GW	HB	HAJ
9	5-4-94	REV/FCN'S VF-2B-2030 2201	PD	HB	HAJ
10	8-11-94	REV/FCN VF-2B-2466	HB	HA	DJR
11	11-9-95	REV/ECN 9396	RMS		ERB

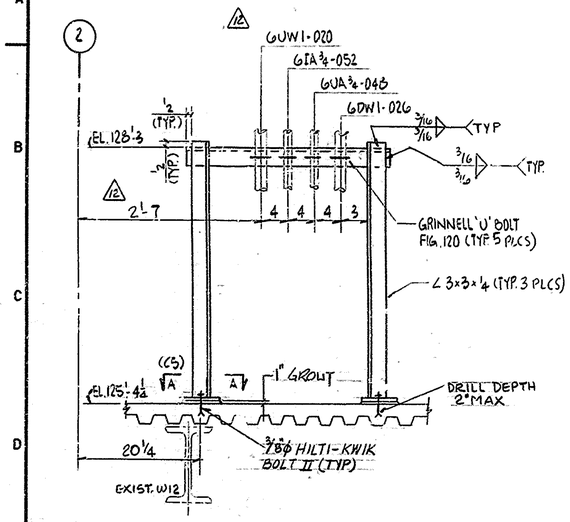

ELEVATION
S-91-1-13(E7)

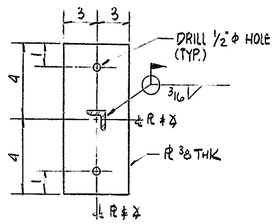

SECTION A-A (D1)

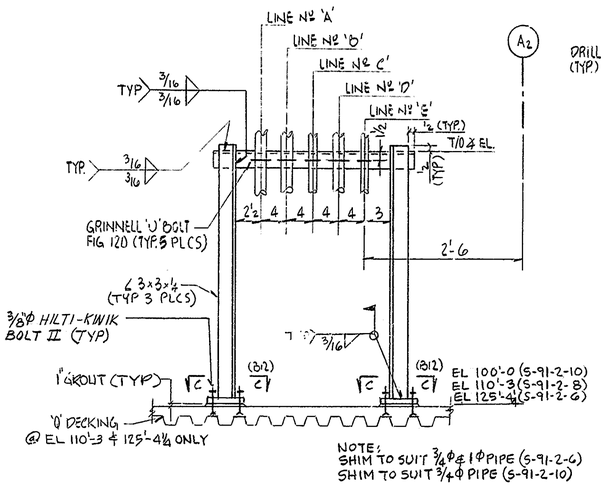

NOTE:
SHIM TO SUIT ¾"Φ & 1"Φ PIPE (S-91-2-6)
SHIM TO SUIT ¾"Φ PIPE (S-91-2-10)

ELEVATION

SUPPORT Nº	ZONE	LINE Nº 'A'	LINE Nº 'B'	LINE Nº 'C'	LINE Nº 'D'	LINE Nº 'E'	T/O & EL.
S-91-2-6	C12	6DW1-025	6UW2-003	6TA2-007	6SH1-062	6UA-2-035	128'-9
S-91-2-8	G12	6DW2-039	6UW2-003	6TA2-007	6SH2-061	6UA-2-035	115'-3
S-91-2-10	I12	6DW1-020	6UW1-029	6TA¾-060	6SH1-064	6UA-¾-043	103'-0

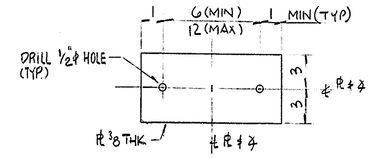

SECTION C-C (D9, D10)

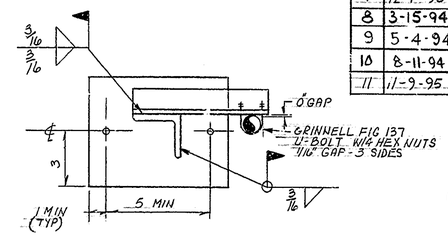

SECTION X-X

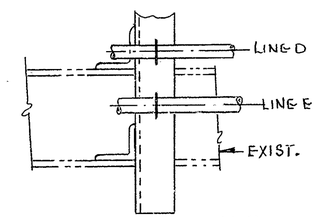

VIEW G-G (H-16)

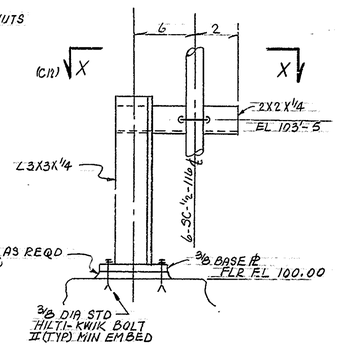

S-86-2-44
LOOKING WEST

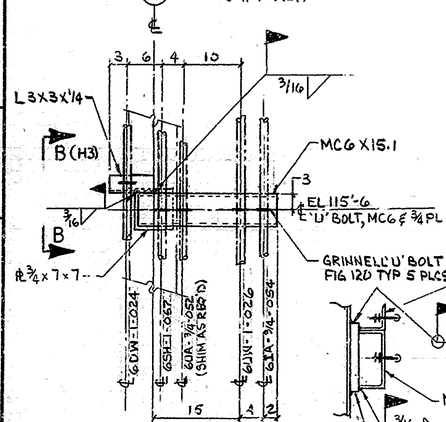

ELEVATION
S-91-1-18
905D-591 SH1 (J12)

VIEW B-B (F1)

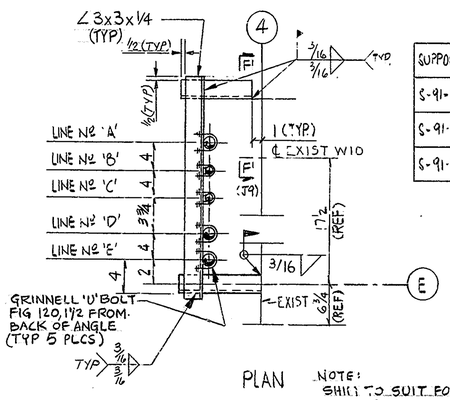

PLAN

NOTE:
SHIM TO SUIT FOR ¾"Φ PIPE

SUPPORT Nº	ZONE	LINE Nº 'A'	LINE Nº 'B'	LINE Nº 'C'	LINE Nº 'D'	LINE Nº 'E'	T/O & EL.
S-91-2-5	I8	6UW1-036	6TA¾-056	6UA¾-051	6SH1-069	6DW1-013	105'-0

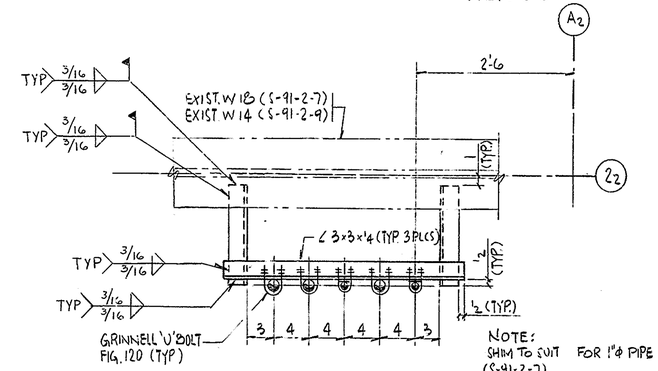

NOTE:
SHIM TO SUIT FOR 1"Φ PIPE (S-91-2-7)
SHIM TO SUIT FOR ¾"Φ PIPE (S-91-2-9)

PLAN
S-91-2-7 (E13)
S-91-2-9 (H13)

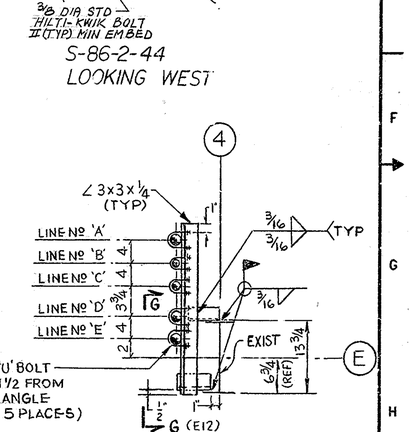

NOTE: SHIM TO SUIT FOR ¾" DIA PIPE

PLAN

SUPPORT Nº	ZONE	LINE 'A'	LINE 'B'	LINE 'C'	LINE 'D'	LINE 'E'	T/O & EL
S-91-2-1	D8	6UW-1-022	6TA¾-053	6UA¾-050	6SH1-063	6DW1-028	128'-3

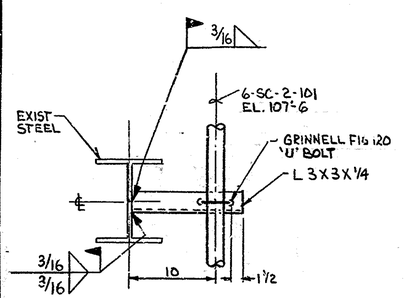

PLAN
S-2926-13

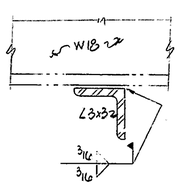

SECTION D-D (J1)

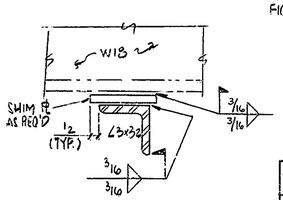

SECTION E-E (J2)

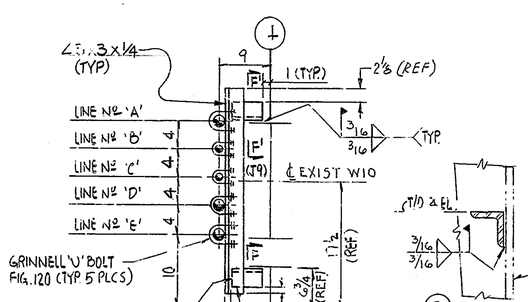

PLAN

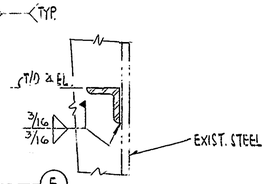

SECTION F-F' (F6, I7)
SECTION F-F (J7)
OPPOSITE HAND

SUPPORT Nº	ZONE	LINE Nº 'A'	LINE Nº 'B'	LINE Nº 'C'	LINE Nº 'D'	LINE Nº 'E'	T/O & EL.
S-91-2-4	H8	6UW1-036	6TA¾-056	6UA¾-051	6SH1-069	6DW1-013	112'-3
S-91-2-3	F8	6UW1-036	6TA2-061	6UA2-049	6SH2-066	6DW2-007	117'-9
S-91-2-2	E8	6DW-1-022	6TA-¾-053	6UA-¾-050	6SH-1-068	6DW-1-028	122'-2

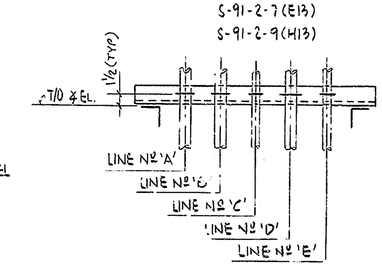

ELEVATION

SUPPORT Nº	ZONE	LINE Nº 'A'	LINE Nº 'B'	LINE Nº 'C'	LINE Nº 'D'	LINE Nº 'E'	T/O & EL.
S-91-2-7	D12	6DW1-025	6UW2-003	6TA2-007	6SH1-062	6UA2-035	123'-6
S-91-2-9	H12	6DW1-020	6UW1-029	6TA¾-060	6SH1-064	6UA¾-043	109'-4

NOTE
FOR GENERAL NOTES AND REFERENCE DRAWINGS SEE DRAWING 905D-510

WVNS APPROVAL
COG. MGR.
COG. ENGR.
DRFT. SUPR.
Q.A. MGR.
R & S MGR.

FOR DRAWING INDEX SEE DRAWING NO.

APPRVD WVNS CO.		EBASCO SERVICES INCORPORATED A/E O.F.S. NO. 2388 TASK ORDER
PROJECT MGR	5/5/89	FOR
ENGINEER SUPV	5/5/89	WEST VALLEY NUCLEAR SERVICES COMPANY, INC WEST VALLEY, NEW YORK
LEAD DISC ENGR	5/5/89	WEST VALLEY DEMONSTRATION PROJECT
DESIGN RJ LENKO	5/5/89	VITRIFICATION FACILITY SUPPORT DETAILS
CHECKED C. AMMENDOLA	5/5/89	
DRAWN W. LEIMBACH	DATE 5/5/89	
DE-AC07-81NE44139 PROJECT NO.		SIZE D; INDEX CODE NUMBER: AREA, DR. TYP, CL, ORIG; DRAWING NO. 905-D-521; REV. 12
19-CWV-02275 SUBCONTRACT NO.		
ISSUED FOR CONSTRUCTION	SCALE	SPEC. CODES; A/E SHEET NO. 905-D-521; B