VERIFY ALL DOCUMENTS FOR CURRENT REVISION AND PENDING CHANGES PRIOR TO EACH USE.
INIT_____ DATE_____

905-D-520

REV NO	DATE	REVISION	DR	CH	APPROVED	
B	6-30-03		JV	HB	RDL	
GENERAL REVISION REVISED AS CIRCLED						
0	7/19/89	ER 16 50			MGH	
21	8-19-96	REV PER ECN 10194	DRS	HB		
12	6-7-94	FCN VF-28-2068/2123	GW	HB	HAJ	
13	1-17-95	REV/FCN VF28-3027	JH	GB	HAJ	
14	3-3-95	FCN VF 28-3169	RS		HAJ	
15	7-12-95	REV/ECN 19048	DDK	KQ		
16	10-3-95	REV ECN 19260	MJL	KQ		
17	12-18-95	REV/FCN-TM1492	SRD	KQ		
18	12-29-95	ECN-9468	BP	RB		
19	1-24-96	FCN TM-1866	GW	KQ		
20	2-15-96	REV/FCN TM-1954	RMS	HB		

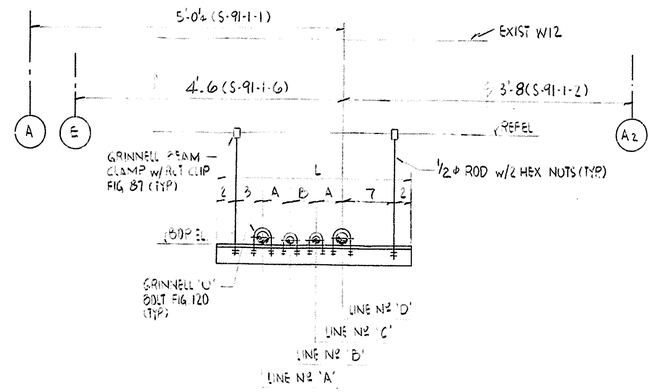

ELEVATION

SUPPORT N2	ZONE	LINE N2 'A' BOP EL	LINE N2 'B' BOP EL	LINE N2 'C' BOP EL	LINE N2 'D' BOP EL		∠ SIZE LENGTH 'L'	DIM 'A'	DIM 'B'	REF EL.
21										
S-91-1-2	B2	6DW2-029	6UW2-005	6IA2-007	–		5x5x¼	4	4	123'-½
		120'-2	120'-2	120'-2	–		22			
S-91-1-6	B12	6DW1-026	6UA¾-043	6IA¾-052	6UW1-020		3x3x¼	4	4	124'-0
		123'-3	123'-3	123'-3	123'-3		2'-2			

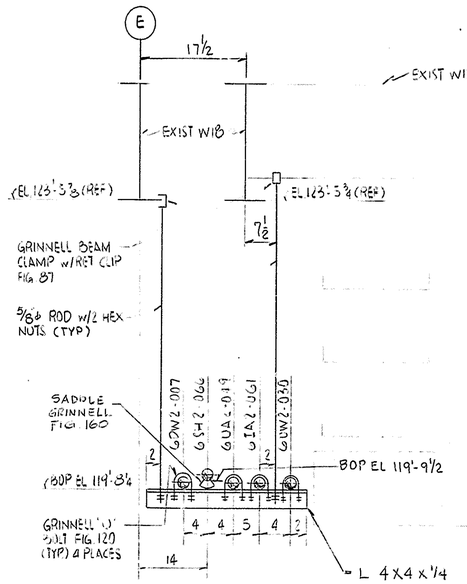

ELEVATION
S-91-1-9 (E12)

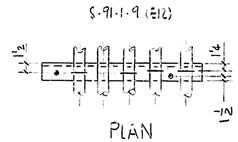

PLAN
S-91-1-9 (E12)

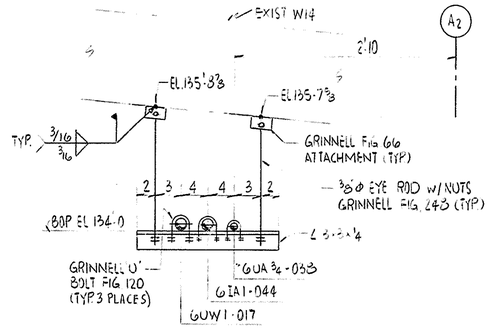

ELEVATION
S-91-1-10 (G4)

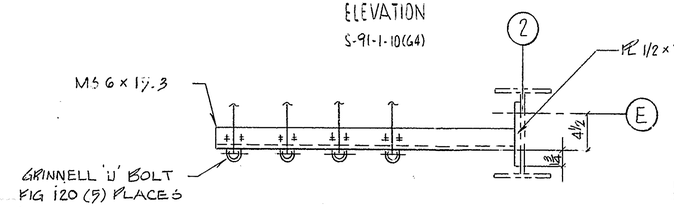

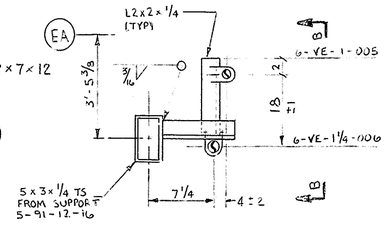

PLAN VIEW

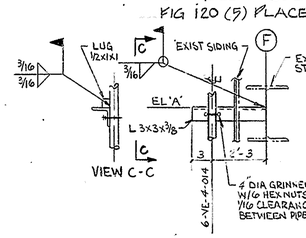

VIEW C-C

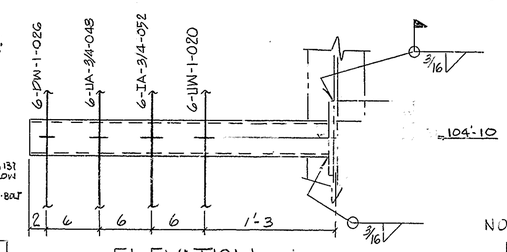

ELEVATION
S-91-1-17 (J12)

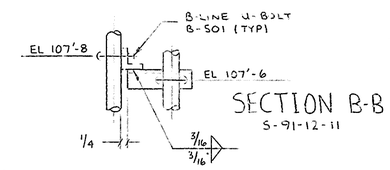

SECTION B-B
S-91-12-11

NOTE:
FOR GENERAL NOTES AND REFERENCE DRAWINGS SEE DWG 905-D-510

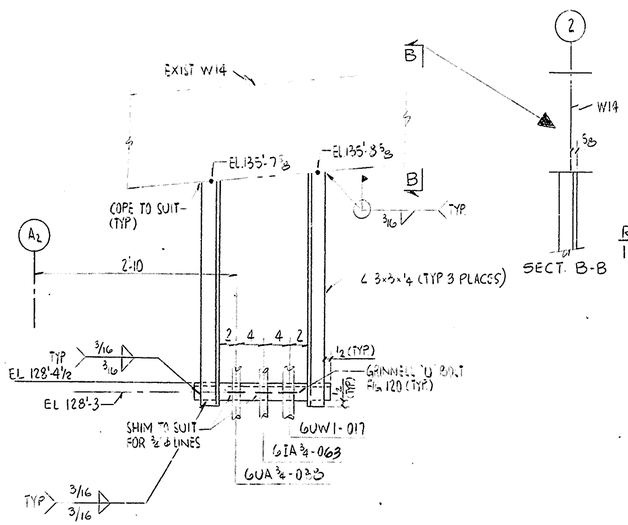

ELEVATION
S-91-1-12 (J2)

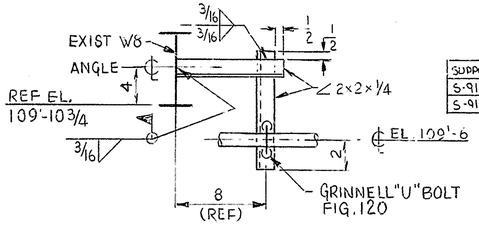

S-91-12-19 REF 905D-591, SH12 (G5)

SUPPORT NO.	ZONE	EL 'A'	EXIST STL 'B'	T.O.S
S-91-6-14	B6	124'-4½	W18	125'-0
S-91-6-15	A6	134'-11⅜	W14	135'-8

ELEVATION

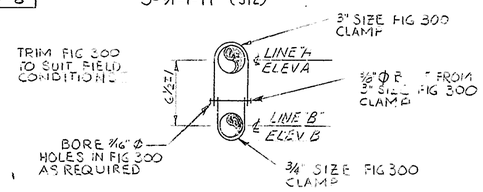

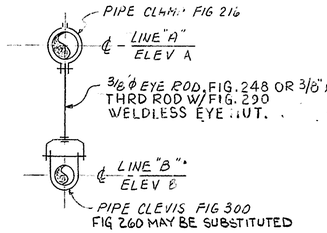

SUPPORT NO	LINE NO A	ELEV A	LINE NO B	ELEV B
S-86-2-19	6-66 3-1104	107'-11	6-SH 3/4-1205	107'-4
S-86-2-20				
S-86-2-21				
S-86-2-22				

SUPPORT NO	LINE NO A	ELEV A	LINE NO B	ELEV B
S-91-15-6	6-SH6-001	115'-10¾	6-SH2-145	114'-6
S-87-3-28	6-CH-2-0125	121'-6½	6-IA-2-009	118'-4½
S-91-15-16	6-CW-6-025	123'-2¾	6-SH-2-145	121'-0

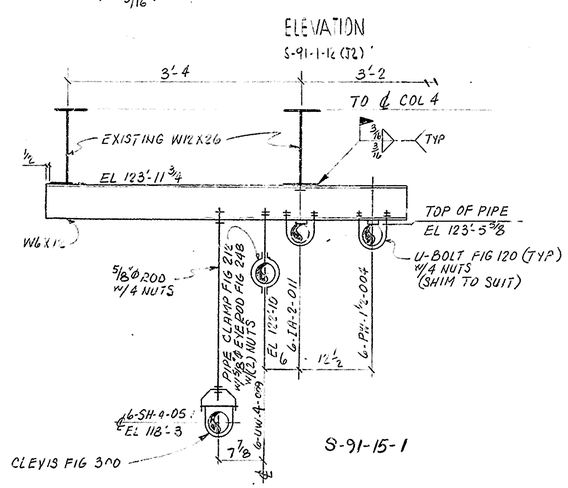

S-91-15-1

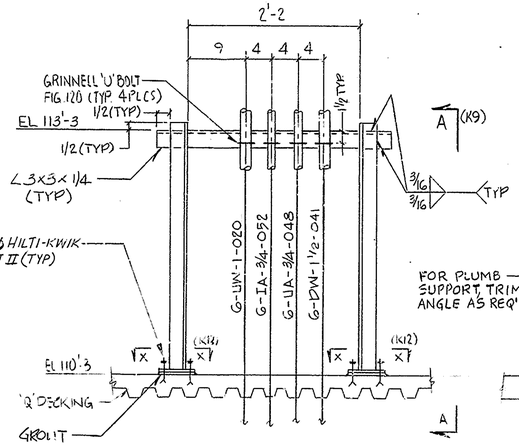

ELEVATION
S-91-1-14 (G6)

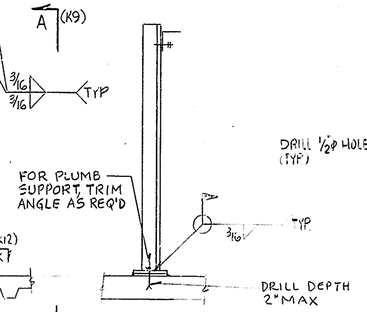

SECTION A-A (I3)

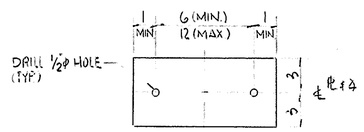

SECTION X-X (K6, K8)
PLATE THICKNESS 3/8

WVNS APPROVAL
COG. MGR.
COG. ENGR.
DRFT. SUPR.
Q.A. MGR.
R & S MGR.

FOR DRAWING INDEX SEE DRAWING NO.

APPRVD WVNS CO.		EBASCO SERVICES INCORPORATED A/E O.F.S. NO. 2388 TASK ORDER 009
PROJECT MGR	5 5 89	FOR WEST VALLEY NUCLEAR SERVICES COMPANY, INC WEST VALLEY, NEW YORK
ENGINEER SUPV	5/5/89	
LEAD DISC ENGR	5/5/89	WEST VALLEY DEMONSTRATION PROJECT
DESIGN R. Lewis		VITRIFICATION FACILITY SUPPORT DETAILS
CHECKED C. Ambrosino		
DRAWN W. LE MISACH	DATE	
DE-AC07-81NE44139 PROJECT NO.		SIZE D; INDEX CODE NUMBER: AREA, DR. TYP, CL, ORIG; DRAWING NO. 905-D-520; REV. 21
19-CWV-02275 SUBCONTRACT NO.		
ISSUED FOR CONSTRUCTION		SCALE NONE; SPEC. CODES; A/E SHEET NO. 905-D-520 B