VERIFY ALL DOCUMENTS FOR CURRENT REVISION AND PENDING CHANGES PRIOR TO EACH USE.
INIT_____ DATE_____

905-D-517

REV NO	DATE	REVISION	DR	CH	APPROVED
B	6-30-97		JW	MS	RSL
		GENERAL REVISION - REVISED AS CIRCLED			
0	7/9/92	SR 1080			
1	6-29-92	REV/ECN VF-2B-00491	PAK	HB	
2	08-31-92	REV PER ECN 5465	HB	DRS	
3	1-6-93	REV PER ECN 5331	GM	DRS	RWM
4	5-14-93	REV PER ECN 6331	CW	HB	HAJ
5	6-10-93	REV/ VF-2B-1077	CW	HB	HAJ
6	6-23-93	REV/ECN VF-2B-0976	MJC	DRS	HAJ
7	1-27-94	REV/ECN VF-2B-1733	PD	HB	HAJ
8	4-7-94	REV/ECN VF-2B-1925 AND VF-2B-2003	JH	HB	HAJ
9	5-13-94	REV/ECN VF-2B1856	PD	HB	HAJ
10	3-13-96	REV/ECN 9645	SRD	HB	
11	11-07-96	ECN 10259	HB	DRS	

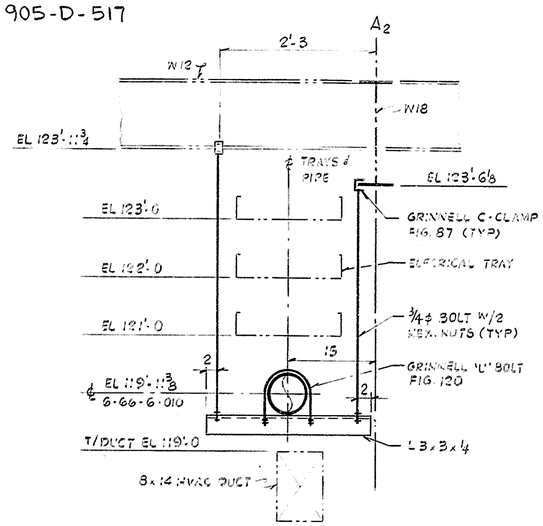

ELEVATION
S-89-2-1 (A10)
S-89-2-2 (A5)
S-89-2-6 (A5)

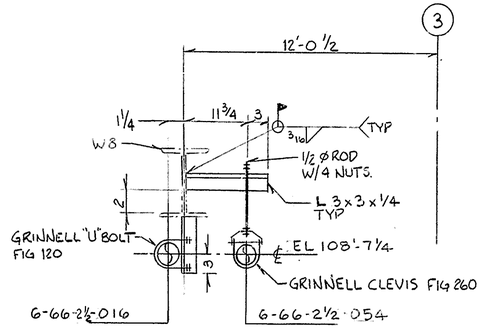

ELEVATION
S-89-1-10 (E4)

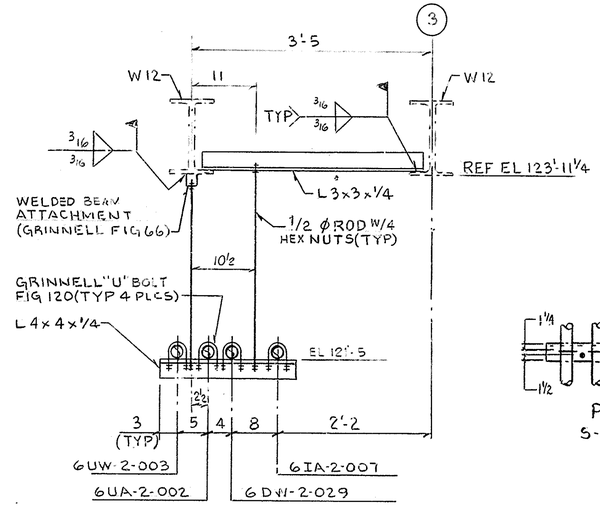

ELEVATION
S-89-2-9 (J7)

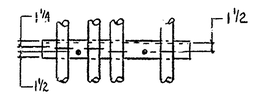

PLAN
S-89-2-9 (E12)

NOTES
FOR GENERAL NOTES & REFERENCE DRAWINGS SEE DRAWING 905-D-510

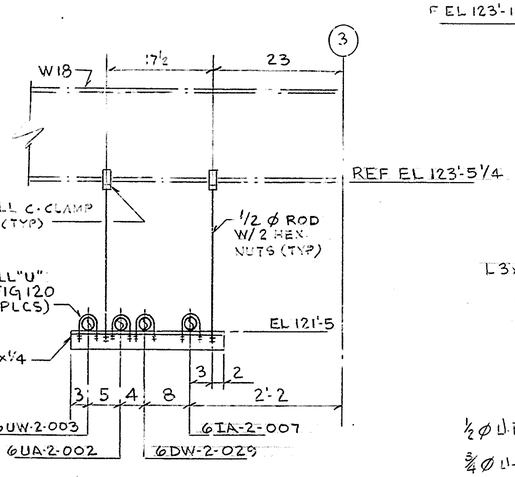

ELEVATION
S-89-2-10 (D6)

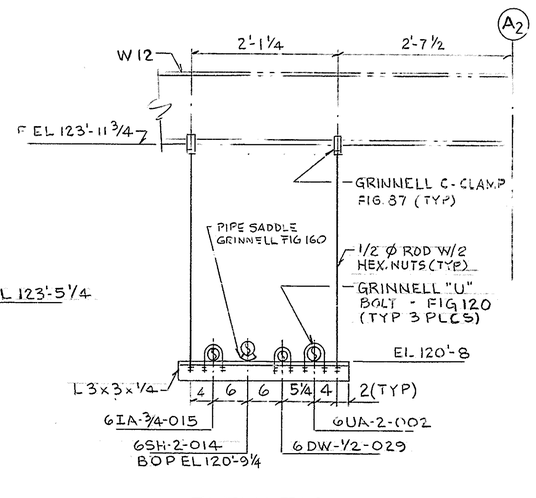

ELEVATION
S-89-2-3 (J9)

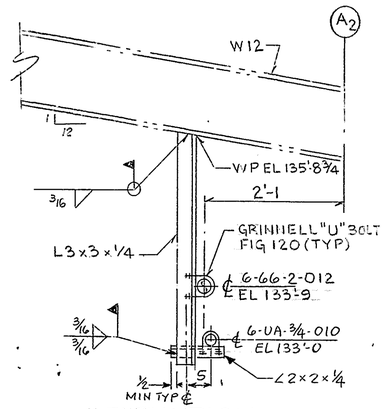

ELEVATION
S-89-3-4 (C8)

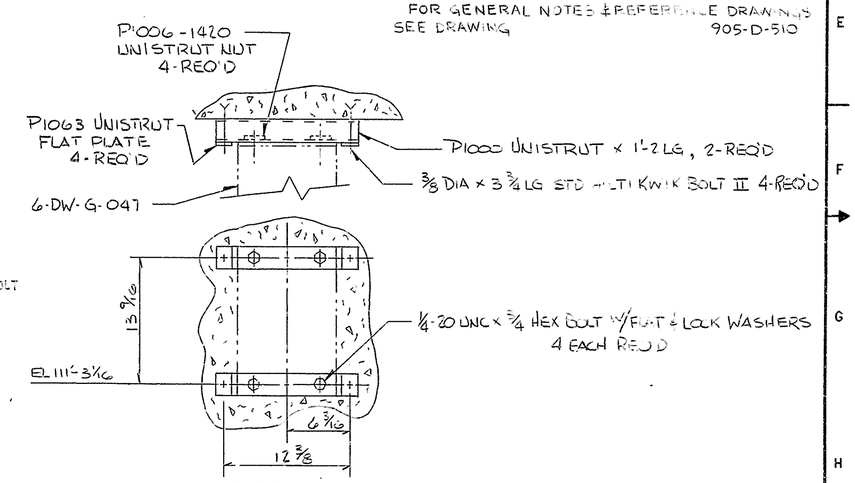

ELEVATION
S-89-1-32 (K13)

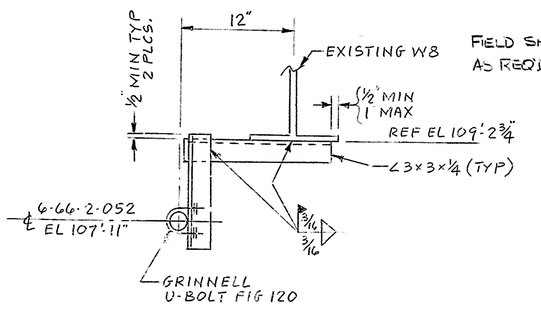

ELEVATION LKG. EAST
S-89-1-14 (C4)

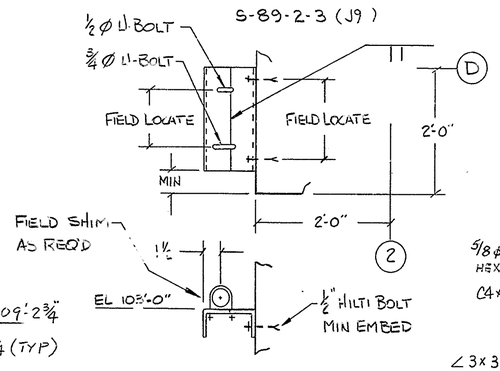

⚠ S-91-4-42
NTS

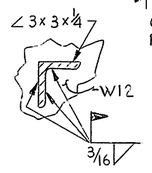

SECTION J-J (J9)
NTS

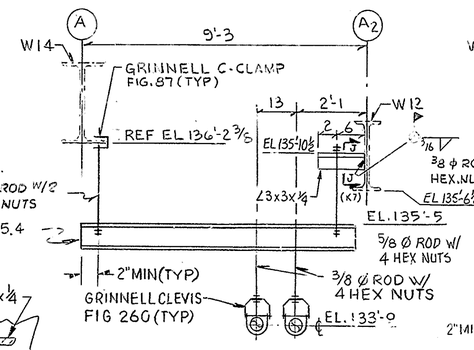

ELEVATION
S-89-3-7 (H6)

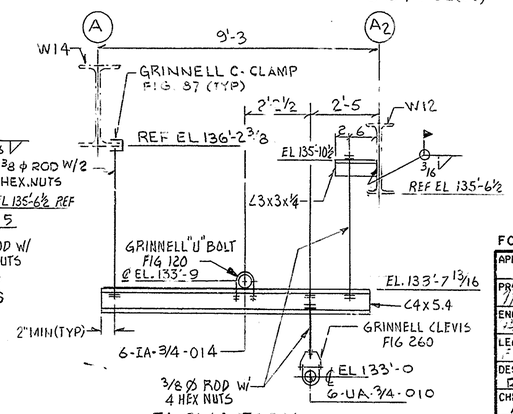

ELEVATION
S-89-3-3 (C6)

WVNS APPROVAL
COG. MGR.
COG. ENGR.
DRFT. SUPR.
Q.A. MGR.
R & S MGR.

FOR DRAWING INDEX SEE DRAWING NO.

APPRVD WVNS CO.		EBASCO SERVICES INCORPORATED
PROJECT MGR	3/1/97	A/E NO. 2388 TASK ORDER 009
ENGINEER SUPV	3/1/97	FOR WEST VALLEY NUCLEAR SERVICES COMPANY, INC WEST VALLEY, NEW YORK
LEAD DISC ENGR	3/14/97	WEST VALLEY DEMONSTRATION PROJECT
DESIGN R. LENKE	3/14/97	VITRIFICATION FACILITY
CHECKED A. VIRGO	3/14/97	SUPPORT DETAILS
DRAWN C. MAMENDOLA	DATE 3/14/97	

DE-AC07-81NE44139 PROJECT NO.	SIZE	INDEX CODE NUMBER	DRAWING NO.	REV.
19-CWV-02275 SUBCONTRACT NO.	D	AREA / DR. TYP / CL / ORIG.	905D-517	11
ISSUED FOR CONSTRUCTION	SCALE NONE	SPEC. CODES	A/E SHEET NO. 905-D-517	B