VERIFY ALL DOCUMENTS FOR CURRENT REVISION AND PENDING CHANGES PRIOR TO EACH USE.
INIT_____ DATE_____

905D-515

REV NO	DATE	REVISION	DR	CH	APPROVED	
~~B~~	~~6-30-89~~		JV	MS	RJL	
GENERAL REVISION REVISED AS CIRCLED						
0	7/19/89	ER 1650			JRL	
1	10/17/90	GEN REV PER ECN 3935	RKG	HB	DJR	
2	1-17-92	ECN 4647	PD	DES	DJR	
3	5-7-92	REV/ECN 4818	RMS	DES	DJR	
4	7-21-92	REV PER FCN VF-2B-0075	PL	DES	DJR	
5	1-8-93	REV PER ECN 5781	GM	HB	RWM	
6	2-9-93	REV/FCN VF-2B-0617	PD	HB	HAJ	
7	5-13-93	REV PER ECN 6331	GW	HB	HAJ	
8	6-10-93	REV/FCN FV-2B-1077	GW	HB	HAJ	
9	3-22-94	REV/ECN 6667	JH	HB	HAJ	
10	3-30-94	REV/FCN VF-2B-1942	SRD	HB	HAJ	
11	5-18-94	REV/FCN VF-2B 2000 2160	HAJ	HB	HAJ	

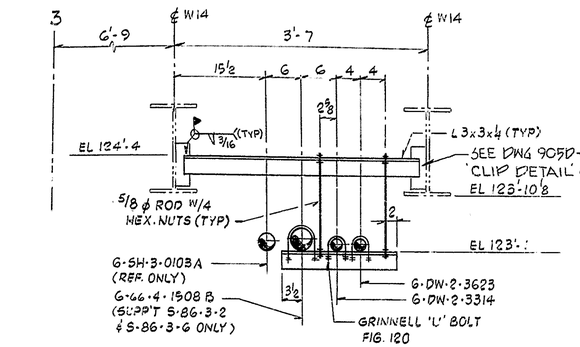

ELEVATION
S-86-3-2 (H4)
S-86-3-6 (F4)
S-86-3-28 (H4)

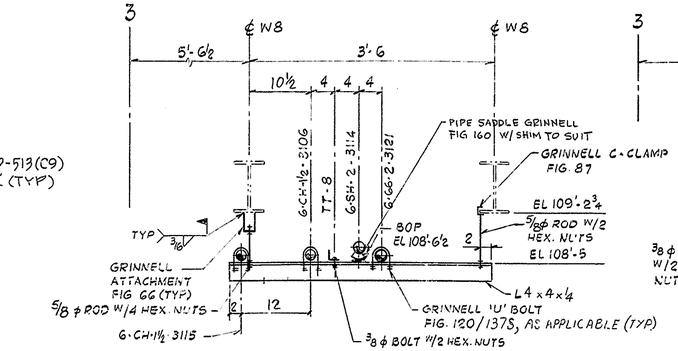

ELEVATION
S-86-4-1 (D4)
S-86-4-2 (E4)

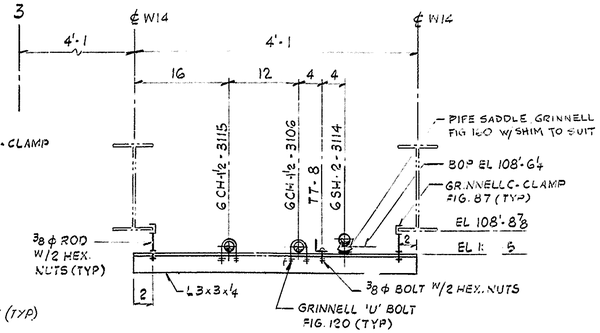

ELEVATION
S-86-4-3 (F4)

PLAN
S-86-4-1 (D4)
S-86-2-2 (E4)

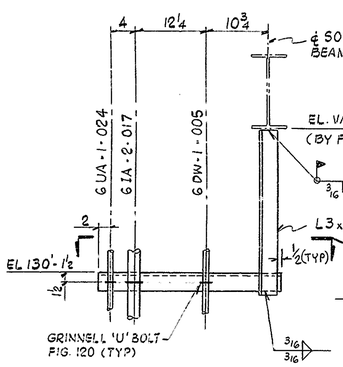

ELEVATION
S-87-3-11 (B12)

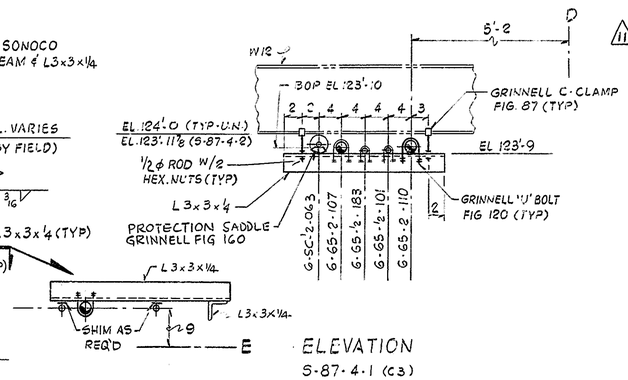

ELEVATION
S-87-4-1 (C3)
S-87-4-2 (C4)
S-87-4-3 (C5)

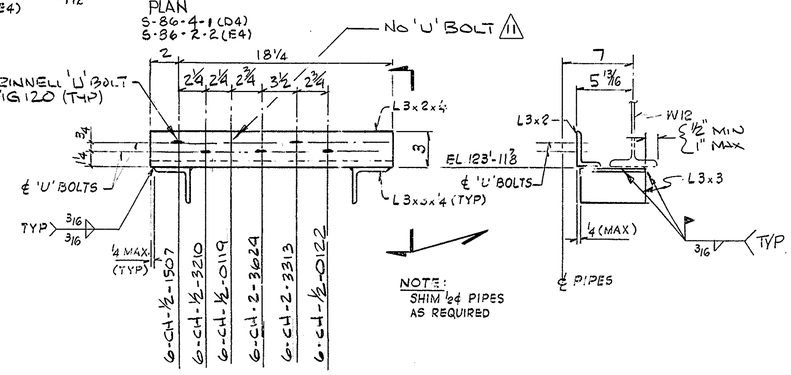

ELEVATION 11
S-86-3-29 (D5)

FOR GENERAL NOTES & REFERENCE DRAWINGS SEE DRAWING 905-D-510

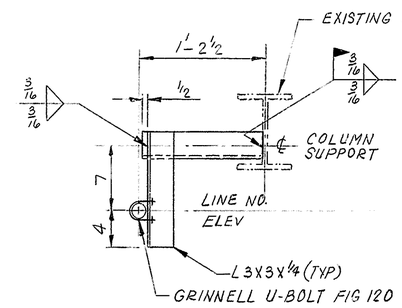

PLAN

SUPPORT #	ZONE	LINE NO.	ELEV
S-91-7-15	J 12	G-DWV-4-006	102'-0
S-91-7-16	I 12		108'-0
S-91-7-17	H 12		114'-0
S-91-7-18	F 12		120'-0
S-91-7-19	D 12		126'-0
S-91-7-20	C 12		132'-0

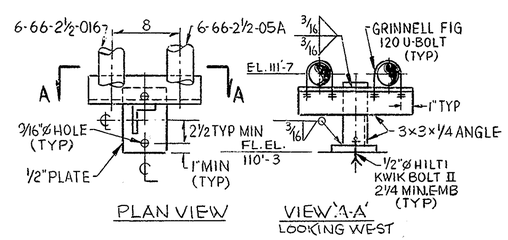

SUPPORT S-89-2-8 (B4)

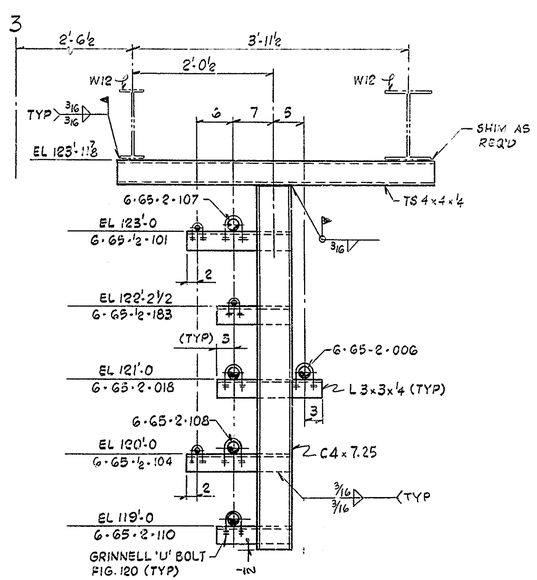

ELEVATION
S-87-4-5 (D2)

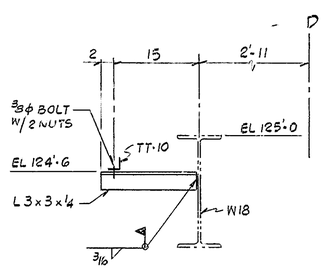

ELEVATION
S-86-3-12 (D7)

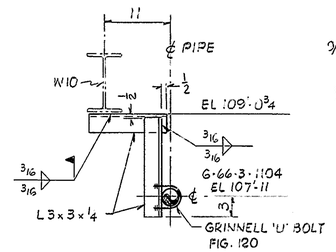

ELEVATION
S-86-2-3 (F3)

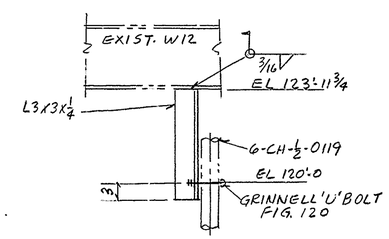

ELEVATION
S-86-1-17 (110)

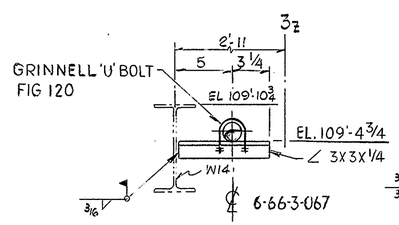

ELEVATION
S-87-2-12 (G5)

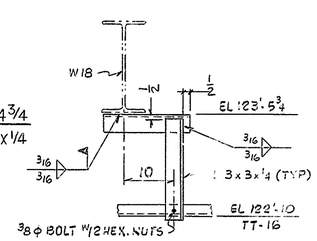

ELEVATION
S-86-3-20 (C4)

WVNS APPROVAL
COG. MGR.
COG. ENGR.
DRFT. SUPR.
Q.A. MGR.
R & S MGR.

FOR DRAWING INDEX SEE DRAWING NO.

APPRVD WVNS CO.		EBASCO SERVICES INCORPORATED
PROJECT MGR	5/17/93	A/E O.F.S. NO. 2388 TASK ORDER 009
ENGINEER SUPV	3/1/93	FOR WEST VALLEY NUCLEAR SERVICES COMPANY, INC WEST VALLEY, NEW YORK
LEAD DISC ENGR F J EMMER	3/1/93	WEST VALLEY DEMONSTRATION PROJECT
DESIGN R J LENKO	3/16/93	VITRIFICATION FACILITY
CHECKED S. ELIA	3/16/93	SUPPORT DETAILS
DRAWN V. SEKERKA	DATE 3/1/93	
DE-AC07-81NE44139 PROJECT NO.	SIZE D	INDEX CODE NUMBER: AREA / DR. TYP / CL / ORIG	DRAWING NO. 905D-515	REV. 11
19-CWV-02275 SUBCONTRACT NO.				
ISSUED FOR CONSTRUCTION	SCALE NONE	SPEC. CODES	A/E SHEET NO. 905-D-515	B