VERIFY ALL DOCUMENTS FOR CURRENT REVISION AND PENDING CHANGES PRIOR TO EACH USE.
INIT_____ DATE_____

905D-514

REV NO	DATE	REVISION	DR	CH	APPROVED
B	~~6-30-89~~		JB		RCL
		GENERAL REVISION, REVISED AS CIRCLED			
0	7/19/89	ERD 50			
1	10/17/90	GEN REV PER ECN 3335	RKG	HAB	DJR
2	1-17-92	ECN 4647	PD	DRS	DJR
3	7-28-92	REV/FCN VF-2B-0157	DRS	HAB	DJR
4	12-15-92	REV PER VF-2B-0430	HAB	DRS	HAJ
5	5-13-93	REV PER ECN 6331	GW	HAB	HAJ
6	6-17-93	REV/FCN VF-2B-0958	PD	DRS	HAJ
7	7-15-93	REV/FCN VF-2B-1170	RMS	DRS	HAJ
8	12-3-93	REV/FCN VF-2B-1422	PD	HAB	HAJ
9	12-16-93	REV/FCN VF-2B-1307	SRD	HAB	HAJ
10	3-23-94	REV PER ECN 6667	JH	HAB	[illegible]
11	4-13-94	REV PER FCN 2021	TMT	HAB	HAJ
12	9-1-94	REV PER FCN 250[illegible]	GW	HAB	HAJ
13	2-14-95	REV PER ECN 8800	MJL	KG	[illegible]
14	3-29-95	REV/FCN TM-0133	DDK	CLJ	[illegible]
15	4-25-95	REV/FCN TM-0182	DDK	CHP	HAJ

FOR GENERAL NOTES & REFERENCE DRAWINGS SEE DRAWING 905-D-510

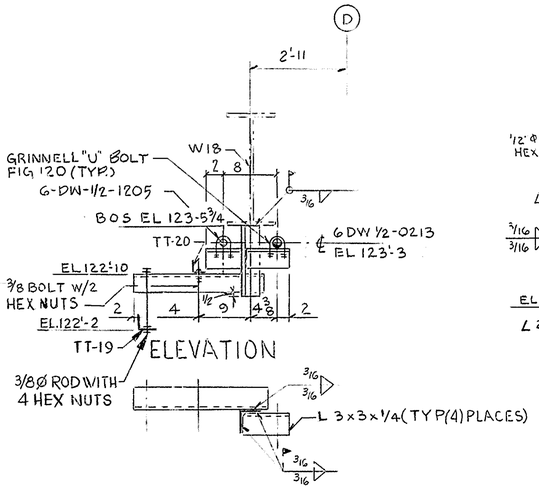

PLAN
S-86-1-12 (G11)

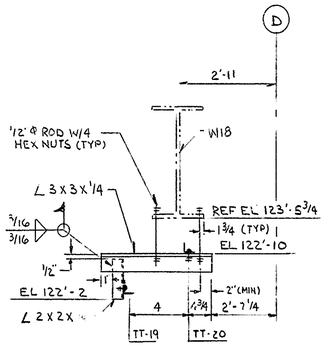

ELEVATION
S-86-1-10 (H10)

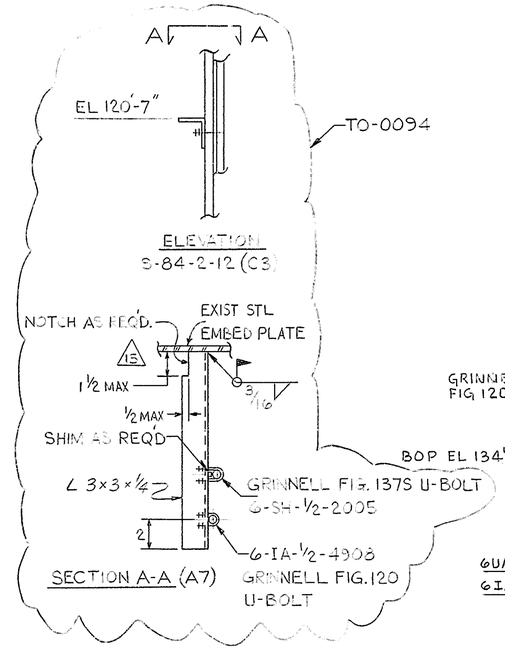

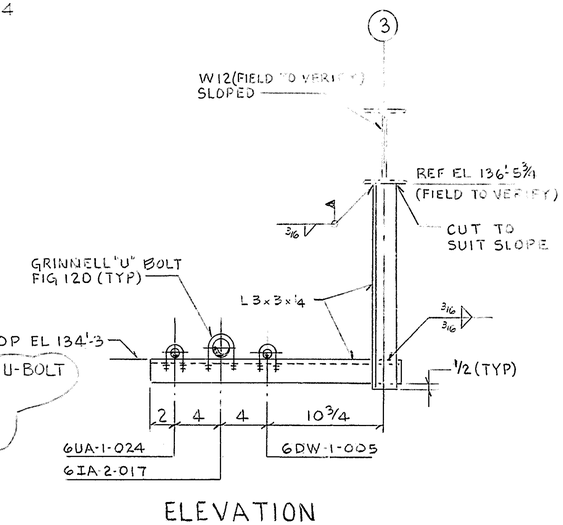

ELEVATION
S-87-5-11 (I12)

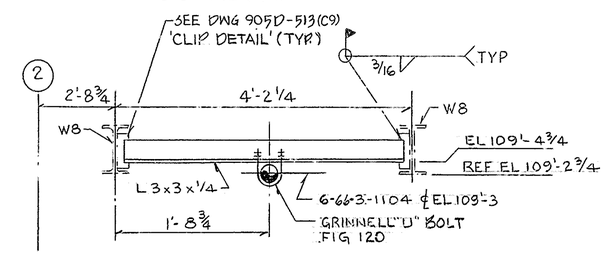

ELEVATION
S-86-2-17 (I6)

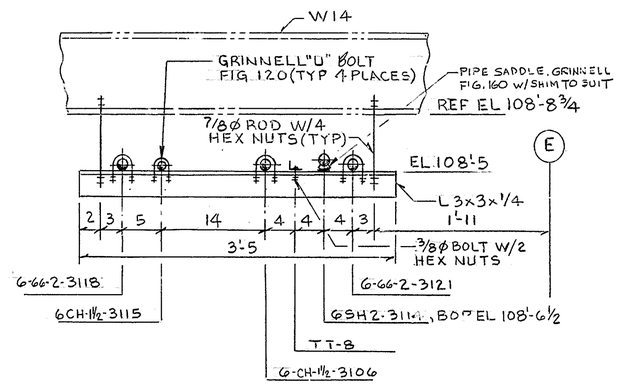

ELEVATION
S-86-4-4 (F4)

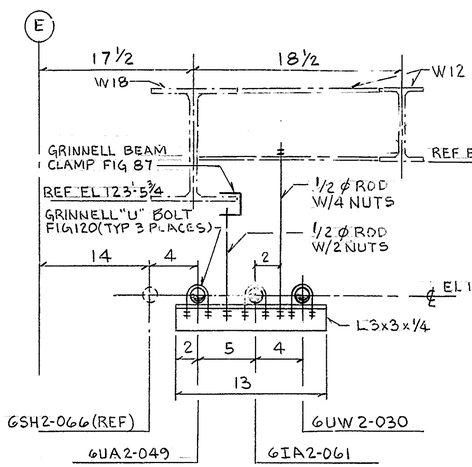

ELEVATION
S-87-4-7 (D6)

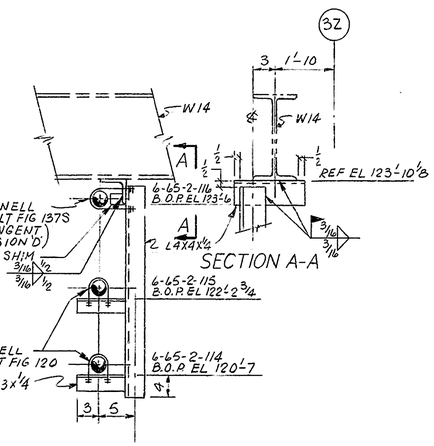

S-87-4-15 (F3)

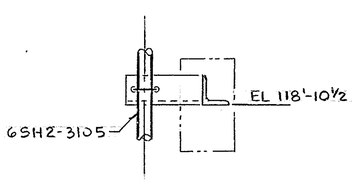

SECTION A-A (K2)

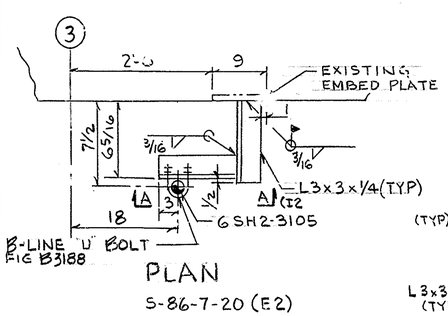

PLAN
S-86-7-20 (E2)

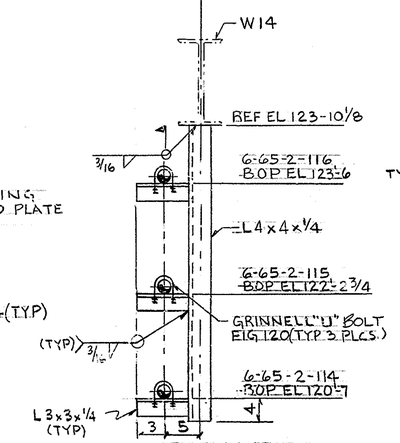

ELEVATION
S-87-4-14 (F3)

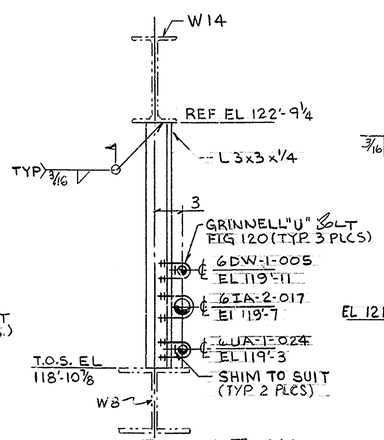

ELEVATION
S-87-3-12 (B12)

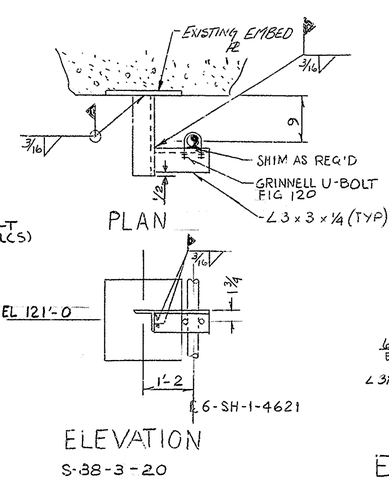

ELEVATION
S-88-3-20

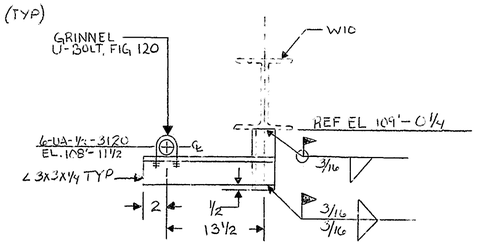

ELEVATION LOOKING EAST
S-87-1-15 (E1)

WVNS APPROVAL
COG. MGR.
COG. ENGR.
DRFT. SUPR.
Q.A. MGR.
R & S MGR.

FOR DRAWING INDEX SEE DRAWING NO.

APPRVD WVNS CO.		EBASCO SERVICES INCORPORATED
PROJECT MGR	2/1/95	A/E O.F.S. NO. 2388 TASK ORDER .009
ENGINEER SUPV	3/1/95	FOR WEST VALLEY NUCLEAR SERVICES COMPANY, INC WEST VALLEY, NEW YORK
LEAD DISC ENGR F J EMMER	3/16/95	WEST VALLEY DEMONSTRATION PROJECT
DESIGN D J LEWKO	2/1/95	VITRIFICATION FACILITY
CHECKED A. T. VIRGO	3/16/95	SUPPORT DETAILS
DRAWN C. AMMENDOLA	3/16/95	
DE-AC07-81NE44139 PROJECT NO.		SIZE D; INDEX CODE NUMBER: AREA / DR. TYP / CL / ORIG; DRAWING NO. 905D-514; REV. 15
19-CWV-02275 SUBCONTRACT NO.		
ISSUED FOR CONSTRUCTION		SCALE 1/4"; SPEC. CODES; A/E SHEET NO. 905-D-514 B