VERIFY ALL DOCUMENTS FOR CURRENT REVISION AND PENDING CHANGES PRIOR TO EACH USE.
INIT_____ DATE_____

905-D-513

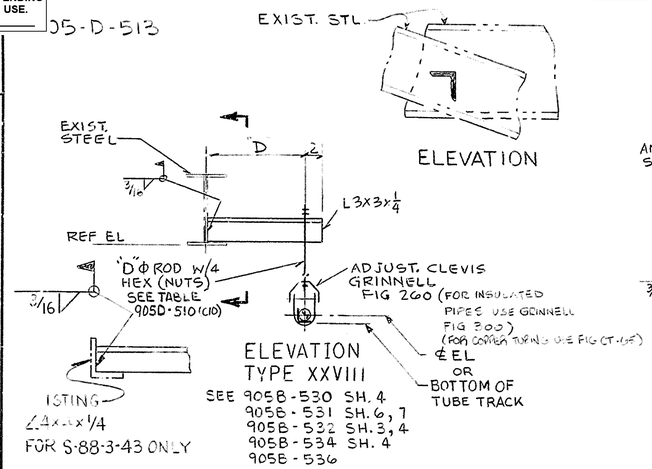

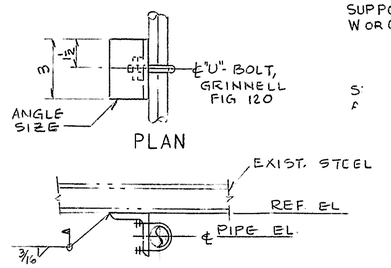

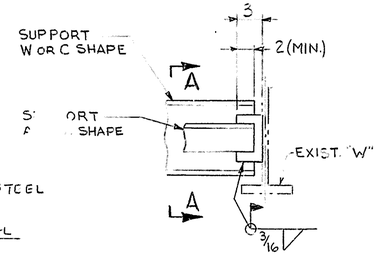

EXIST. BEAM TO SUPPORT CONNECTION DETAIL

FOR PLACEMENT/ORIENTATION OF PLATE, SEE INDIVIDUAL SUPPORT DETAIL.

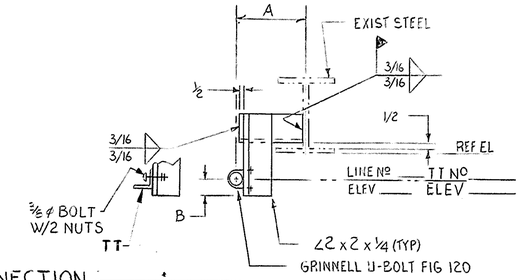

SUPPORT #	ZONE	LINE Nº	ELEV	REF EL	A DIM.	B DIM
S-83-1-19	I9	TT-1	108'-6	109-4¾	7	2

REV NO	DATE	REVISION	DR	CH	APPROVED
33	6-30-95		JV		
GENERAL REVISION REVISED AS CIRCLED					
0	7/9/85	ER 1050			
33	8-15-95	REV/FCN TM-3512-2940	RMS	KG	
34	12-21-95	REV/FCN TM-1715	KMS		
35	5-16-96	REV PER ECN 9907	DAK		
36	10-2-96	REV PER ECN 10261	GW		
21	3-29-94	REV/ FCN VF-28-1877	KGZ		
22	4-26-94	REV PER ECN 7765	GW	DRS	HAJ
23	5-11-94	REV/ECN 7292	RMS		RWM
24	5-19-94	FCN VF-28-2128, 1916, 2159			HAJ
25	6-1-94	REV PER VF-28-2101	GW		HAJ
26	6-16-94	REV/FCN VF-28-2178/2112	MJC		HAJ
27	7-15-94	REV/FCN VF-28-2383 #2356	RMS		HAJ
28	8-17-94	REV/FCN VF-28-2547	GW		HAJ
29	8-30-94	REV/FCN VF-28-2333	MJC		RWM
30	10-24-94	REV/FCN VF-28-2793	JH		RWM
31	6-20-95	ECN 9020	PD	DRS	—
32	7-17-95	ECN 9047	GW		

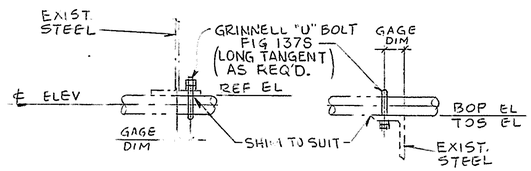

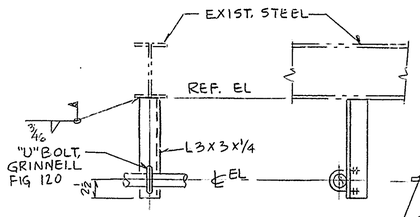

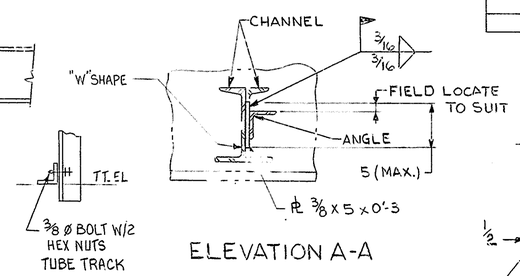

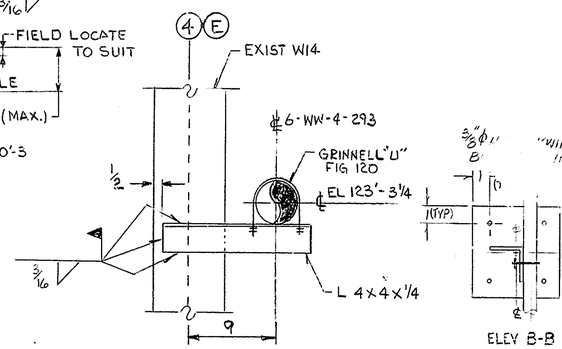

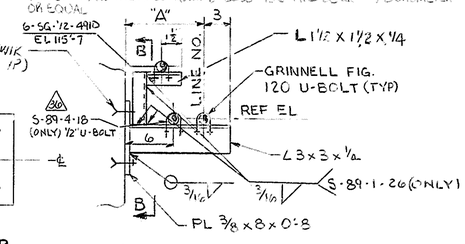

FOR GENERAL NOTES & REFERENCE DRAWINGS SEE DRAWING 905-D-510

NOTE

FOR ALL REINFORCEMENT LINES ADD ONE 1/8" OF INSULATION BETWEEN THE SUPPORTS AND THE PIPES ASTM D-2000-TYPE BC-415 DUROMETER OR EQUAL

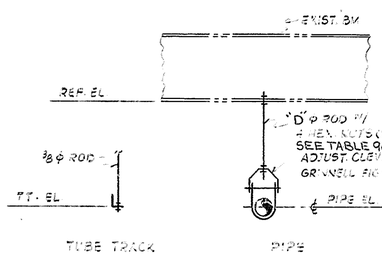

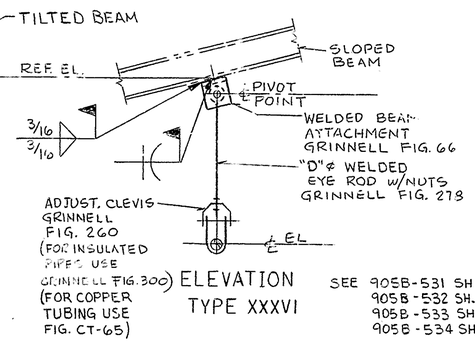

"D" ROD DIA.	
1/2" THRU 2" PIPE	3/8
3" PIPE	1/2
4" PIPE	5/8
6" PIPE	3/4
8" PIPE	3/4 / 7/8

NOTE: FOR 8" PIPE, USE 3/4" ϕ ROD FOR FIG. 260 AND 7/8" ϕ FOR FIG. 300.

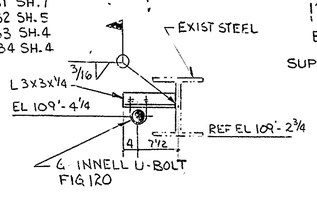

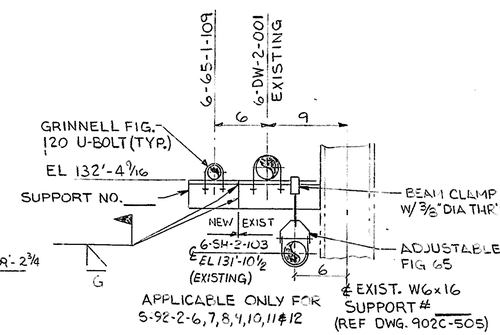

(TYP) VERTICAL OR HORIZONTAL PIPE

SUPPORT NO.	ZONE	LINE NO.	ELEV.	"A" DIM.
S-89-4-12	E8	6-UA-1/2-057 6-UA-1/2-2052	113'-6 1/4	18
S-89-4-13	E9	6-UA-1/2-042 6-UA-1/2-2052	120'-4	18
S-89-1-25	J7	6-DW-3/4-1121	112'-4	7 1/2
S-92-1-12	B4	6-CH-2-5001	136'-3	20
S-83-2-02	I6	6-DW-1/2-1139	108'-0	7 1/2
S-89-1-24	I11	6-AC-1/2-4910	113'-7	7 1/2
S-89-4-18	F2	6-DW-1/2-035	113'-0	9
S-89-4-19	D2	6-DW-1/2-4802	120'-4	6
S-89-4-20	E1	6-DW-1/2-4802	118'-2	9
S-89-4-21	F1	6-DW-1/2-4803B	113'-4	9
S-89-1-20	J12	6-UA-1/2-063	113'-9	2 1/4
S-89-1-26	J10	6-SG-1/2-4910	VERTICAL & 113'-7	3
S-92-1-16	G12	6-CH-1-2006	128'-6	3

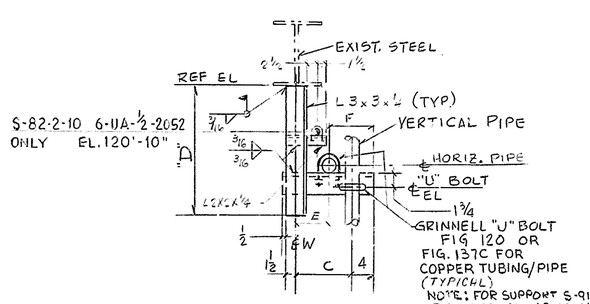

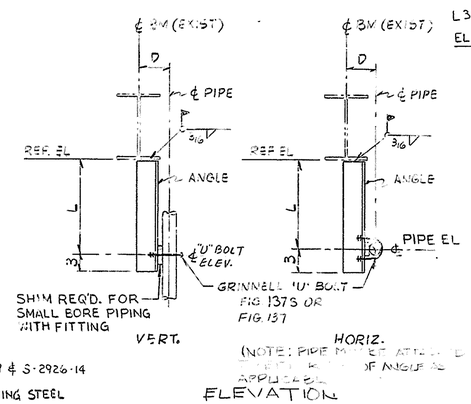

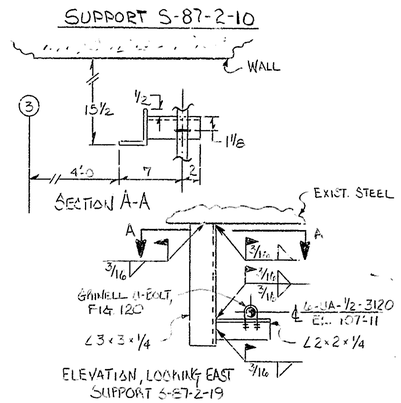

SUPPORT NUMBER	EXISTING SUPPORT #	ZONE
S-92-2-6	S15	C3
S-92-2-7	S16	C2
S-92-2-8	S17	C1
S-92-2-9	S18	D1
S-92-2-10	S19	E1
S-92-2-11	S20	F1
S-92-2-12	S21	G1
S-92-2-13	S22	H1
S-92-2-14	S23	I1
S-92-2-15	S24	I2
S-92-2-16	S25	I2

WVNS APPROVAL
COG. MGR.
COG. ENGR.
DRFT. SUPR.
Q.A. MGR.
R & S MGR.

FOR DRAWING INDEX SEE DRAWING NO.

APPRVD WVNS CO.		EBASCO SERVICES INCORPORATED
PROJECT MGR		A/E O.F.S. NO. 2388 TASK ORDER 009
ENGINEER SUPV		FOR WEST VALLEY NUCLEAR SERVICES COMPANY, INC WEST VALLEY, NEW YORK
LEAD DISC ENGR	F.J. EMMER	WEST VALLEY DEMONSTRATION PROJECT
DESIGN		VITRIFICATION FACILITY
CHECKED	S. ELIA	SUPPORT DETAILS
DRAWN	J. JANELLI	

DE-AC07-81NE44139 PROJECT NO.	SIZE D	INDEX CODE NUMBER: AREA / DR. TYP / CL / ORIG	DRAWING NO. 905D-513 REV. 36
19-CWV-02275 SUBCONTRACT NO.		SPEC. CODES	A/E SHEET NO. 905-D-513 B
ISSUED FOR CONSTRUCTION	SCALE		