VERIFY ALL DOCUMENTS FOR CURRENT REVISION AND PENDING CHANGES PRIOR TO EACH USE.
INIT_____ DATE_____

D-454 C

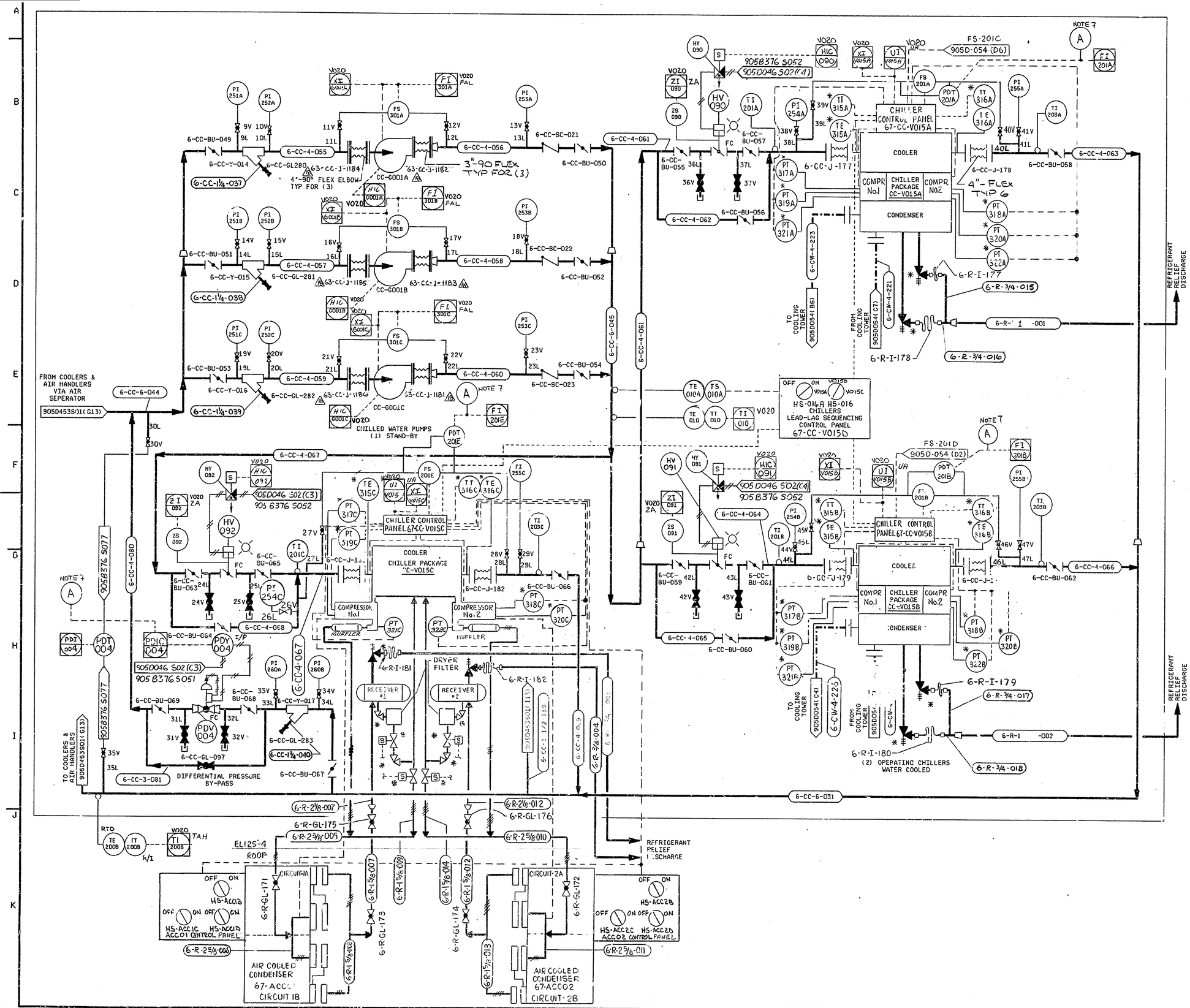

NO	DATE	REVISION	BY	CH	APPROVED	
B	09-30-88		BFR	AV	RJL	JB MB MDW
		GENERAL REVISION				
C	6/29/89		RJS	RL	RJL	JB TB
		GENERAL REVISION				
0	7/13/89	ER 1646				
17	12-17-96	PER ECN 10343	BP	HB		
18	9-10-98	ECN 11352	GN	HB		
3	10/18/90	REV. PER ECN 3978	CGR	HAB	DJR	
4	11/28/90	REV. PER ECN 3982	CGR	DRS	EWS	
5	1-23-91	REV. PER ECN 4101	GW	HAB	DJR	
6	4-24-92	REV. PER ECN 5075	AAJ	HAB	DJR	
7	2-17-94	REV PER ECN 7258 AND 7262	PD	DRS		
8	3-29-94	REV/ECN 7692	PD	HB		
9	5-12-94	GEN REV/ECN 7470	MJL	HB		
10	[illegible]-94	REV/ECN-VF-2B-2435	PD	AZA		
11	1-[illegible]-94	REV PER ECN 8079	KGZ			
12	12-5-94	ECN 8410	GN	KQ		
13	1-11-95	REV/ECN 8480	RMS	DRS	HE	
14	5-23-95	ECN 8944	DMM	DRS	—	
15	6-13-95	REV/ECN 9014	RMS	DRS	—	
16	4-1-96	ECN 9747	GN	HB		

NOTES

1. FOR SYMBOLS, NOTES AND L[illegible] SEE DRAWING 905-D-1306, 1307 & 1308.
2. * DENOTES 'SUPPLIED WITH EQUIPMENT'.
3. ALL INSTRUMENTS AND EQUIPMENT NO.'S ARE PREFIXED BY CC- UNLESS OTHERWISE NOTED.
4. TAG NO. V020 — REPRESENTS DESIGNATED CONTROL PANEL. SHARED DISPLAY SYMBOLS PER ISA-55.3 (1982) INDICATES CRT DISPLAY OR KEYBOARD CONTROL.
5. FOR DESIGNATED LINE NO. 'L' & VALVE NO. 'V' SEE TABLE ON DWG 905-D-453S02.
6. ALL INSTRUMENT ID'S ON THIS DRAWING ARE PREFIXED WITH 67- UNLESS OTHERWISE NOTED. ALL INSTRUMENT ID'S ARE FRONT LOADED WITH ZEROS FOR A FOUR DIGIT LOOP IDENTIFIER. (I.E. PT-260A IS 67-PT-0260A)
7. SELECTED CHILLER CONTROLS PDV-004

REFERENCE DRAWINGS

905D-453 HVAC CHILLED WATER SYSTEM
905D-376 INSTRUMENT INSTALLATION DETAIL

WVNS APPROVAL
CCG. MGR.
CCG. ENGR.
DRFT. SUPR. 7/13/89
Q.A. MGR.
R&S MGR.

FOR DRAWING INDEX SEE DRAWING NO. _____

APPRVD WVNS CO.	EBASCO SERVICES INCORPORATED
PROJECT MGR M D WEINGART 05-15-88	A/E O.F.S. NO. 2388 TASK ORDER 009
ENGINEER SUPV M A BARKAT 05-25-88	FOR WEST VALLEY NUCLEAR SERVICES COMPANY, INC WEST VALLEY, NEW YORK
LEAD DISC ENGR J BIELAWSKI 05-25-88	WEST VALLEY DEMONSTRATION PROJECT
DESIGN R J LEWKO 05-25-88	VITRIFICATION FACILITY HVAC CHILLED WATER SYSTEM P & ID SHEET 2
CHECKED R J LEWKO 05-25-88	
DRAWN T. J. KITZ DATE 05-25-88	
DE-AC07-81NE44139 PROJECT NO.	SIZE D; INDEX CODE NUMBER: AREA, DR. TYP, CL, ORIG; DRAWING NO. 905-D-454; REV. 18
19-CWV-02275 SUBCONTRACT NO.	
ISSUED FOR CONSTRUCTION	SCALE NONE; SPEC. CODES; A/E SHEET NO. 905-D-454 C