VERIFY ALL DOCUMENTS FOR CURRENT REVISION AND PENDING CHANGES PRIOR TO EACH USE.
INIT_____ DATE_____

905-D-453S01 F

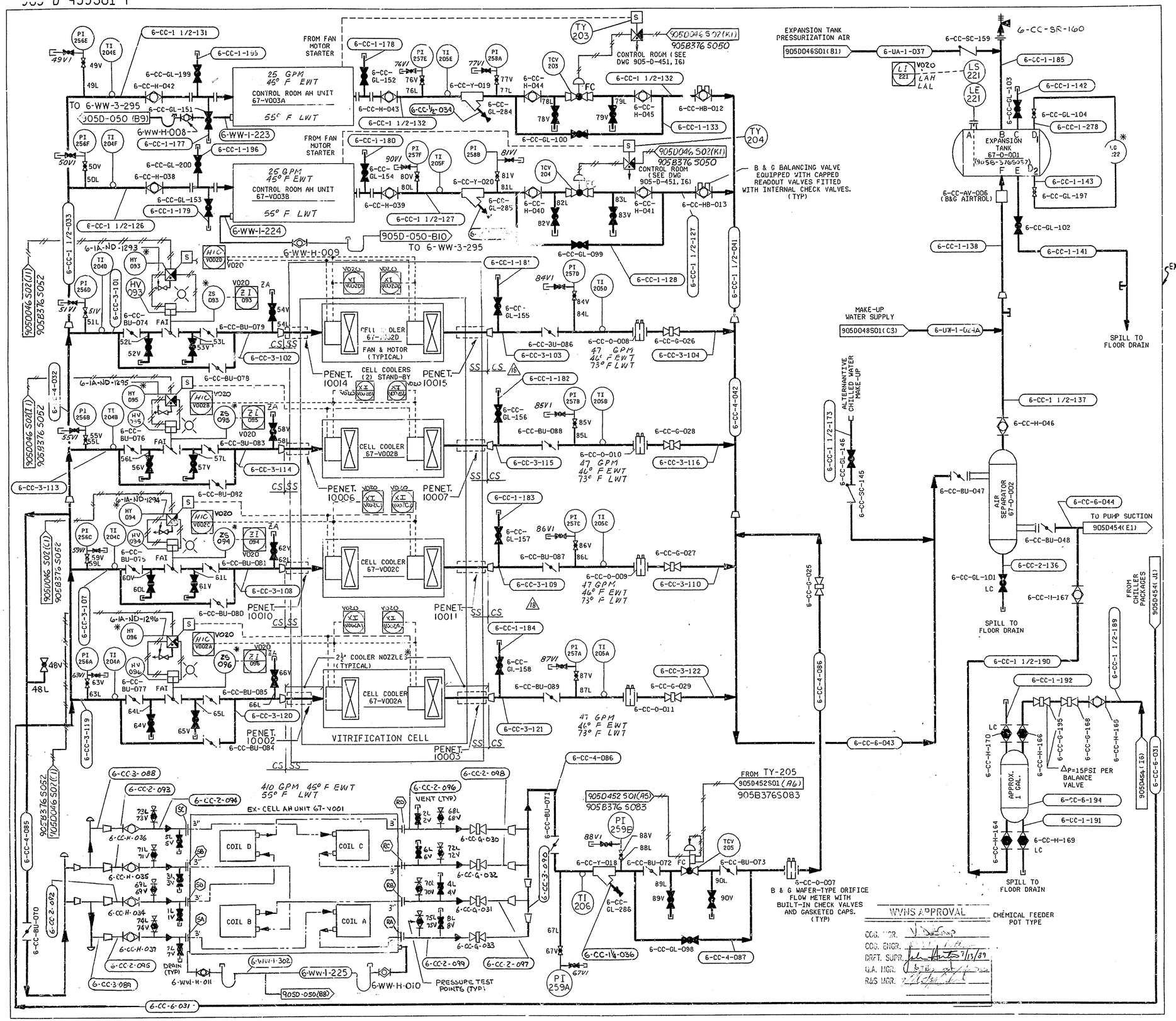

NO	DATE	REVISION	BY	CH	APPROVED		
B	03-06-87	GENERAL REVISION	MK	WDL	FP	JGK	MDW
C	04-17-87	GENERAL REVISION PER EBAR NO. 883A	RJL	KG	FF	JGK	MDW
D	05-25-88	GENERAL REVISION PER TA 653, TA 686, TA 707 & TA 734	TJK	RJL	RJL	JB MAB	MDW
E	09-30-88	GENERAL REVISION	RJL	AV	RJL	JB MAB	MDW
F	6/6/89	GENERAL REVISION	PJS	RDL	RJL	SHK FB	
0	7/13/89	EC 11046					
15	5/23/96	REV'D PER ECN 9953	RMS	EJS	ERB		
16	6-28-96	REV/ECN 10067	RMS	DLS			
17	12-17-96	ECN 10343	BP	HJS			
18	1-20-97	ECN 10458	JHS	HJS			
12	5-10-95	REV/ECN 8905	DDK				
13	6-6-95	ECN 8965	GW	HJS			
14	12-11-95	ECN 9457	DAK	HJS			

NOTES

1. FOR SYMBOLS, NOTES AND LEGEND SEE DRAWINGS 900-D-1306, 1307 & 1308.
2. * DENOTES 'SUPPLIED WITH EQUIPMENT'.
3. ALL INSTRUMENTS AND EQUIPMENT NO.'S ARE PREFIXED BY CC- UNLESS OTHERWISE NOTED.
4. TAG NO V020 REPRESENTS DESIGNATED CONTROL PANEL. SHARED DISPLAY SYMBOLS PER ISA-S5.5 (1985) INDICATES CRT DISPLAY OR KEYBOARD CONTROL.
5. FOR DESIGNATED LINE NO. 'L' & VALVE NO. 'V', "VI", SEE TABLE ON DWG 905-D-453S02.

REFERENCE DRAWINGS

VIT FACILITY HVAC EQUIPMENT ROOM CHILLED WATER PIPING-PLAN & SECTIONS	905-D-085S01
VIT FACILITY HVAC EQUIPMENT ROOM CHILLED WATER PIPING-SECTIONS	905-D-085S02
VIT FACILITY HVAC EX-CELL CHILLED WATER PIPING-PLAN	905-D-085S03
VIT FACILITY HVAC EX-CELL CHILLED WATER PIPING-SECTIONS	905-D-085S04
VIT FACILITY CONTROL ROOM HVAC CHILLED WATER PIPING-PLAN & SECTIONS	905-D-085S05
VIT FACILITY HVAC CHILLED WATER & STEAM COILS PIPING-PLAN & SECTIONS	905-D-085S06
VIT FACILITY ROOF CONDENSER REFRIGERATION PIPING-PLAN & SECTIONS	905-D-085S07
VIT FACILITY HVAC CHILLED WATER SYSTEM P & ID SHEET 3	905-D-453S02
VIT FACILITY HVAC CHILLED WATER SYSTEM P & ID SHEET 2	905-D-454
VIT FACILITY HVAC COOLING TOWER SYSTEM	905-D-054
INSTRUMENT LOCATION ARRANGEMENTS	905-D-370 & 905-D-378
INSTRUMENT INSTALLATION DETAILS	905-B-376S54
VIT FACILITY UTILITY AIR SYSTEM P & ID	905-D-046S01
VIT FACILITY INSTRUMENT AIR SYSTEM P & ID	905-D-046S02
VIT FACILITY UTILITY WATER SYSTEM P & ID	905-D-048S01
VIT FACILITY DRAINAGE PIPING	905-D-082S01
VIT FACILITY HVAC P&ID	905-D-452S01

FOR DRAWING INDEX SEE DRAWING NO. _____

APPRVD WVNS CO.		EBASCO SERVICES INCORPORATED A/E O.F.S. NO. 2388 TASK ORDER 009 FOR WEST VALLEY NUCLEAR SERVICES COMPANY, INC WEST VALLEY, NEW YORK
PROJECT MGR M. D. WEINGART	10-24-86	
ENGINEER SUPV J. KALAGASSY	10-24-86	
LEAD DISC ENGR F. FIELDS	10-24-86	WEST VALLEY DEMONSTRATION PROJECT
DESIGN W. LIEBBACH	10-24-86	VITRIFICATION FACILITY HVAC CHILLED WATER SYSTEM P & ID SHEET 1
CHECKED K. GOBIN	10-24-86	
DRAWN R. J. LEWKO	DATE 10-24-86	

DE-AC07-81NE44139 PROJECT NO.	SIZE D	INDEX CODE NUMBER: AREA, DR. TYP, CL, ORIG	DRAWING NO. 905-D-453 REV. 18
19-CWV-02275 SUBCONTRACT NO.	SCALE NONE	SPEC. CODES	A/E SHEET NO. 905-D-453S01 F
ISSUED FOR CONSTRUCTION			

FILE NAME: 9504532A REV. 06 DIC: (1133, 0441)