VERIFY ALL DOCUMENTS FOR CURRENT REVISION AND PENDING CHANGES PRIOR TO EACH USE.
INIT_____ DATE_____

FILTER CELL		AEROSOL UP	AEROSOL DOWN
A	1	272	402
	2	3	3
	3	4	4
	4	5	5
B	1	6	6
	2	7	7
	3	8	8
	4	9	9
C	1	280	410
	2	1	1
	3	2	2
	4	3	3
D	1	4	4
	2	5	5
	3	6	6
	4	7	7
E	1	8	8
	2	9	9
	3	396	420
	4	7	1
F	1	8	2
	2	9	3
	3	400	4
	4	1	5

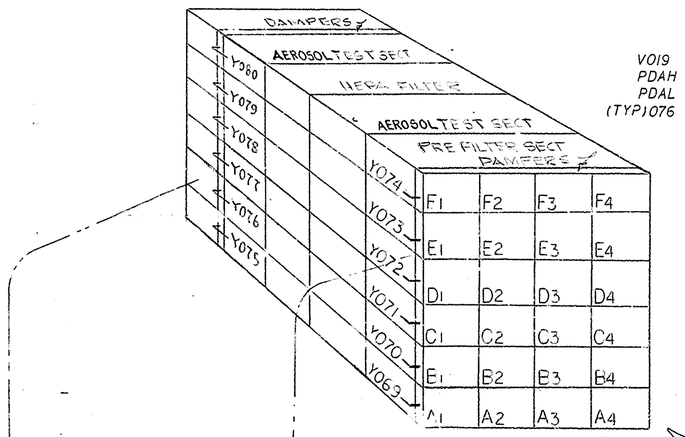

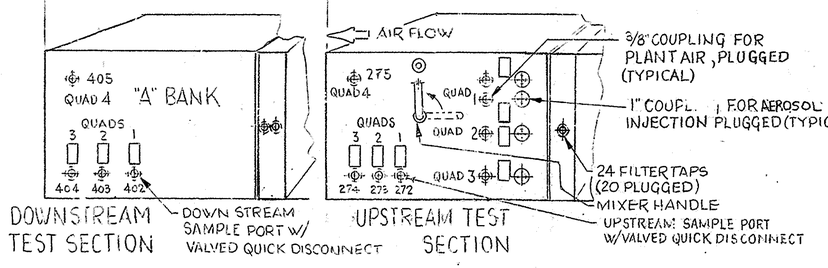

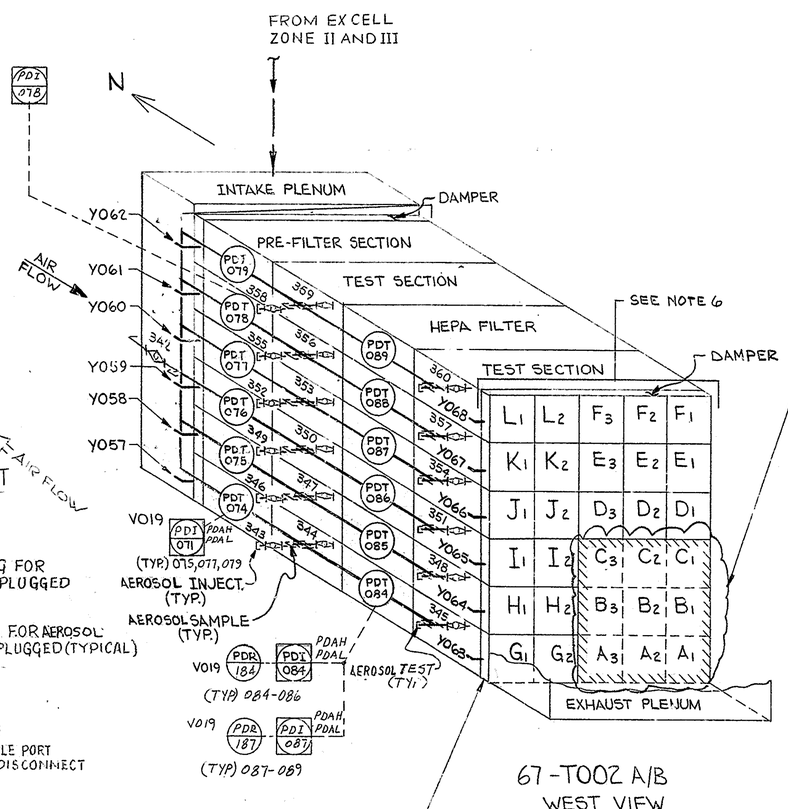

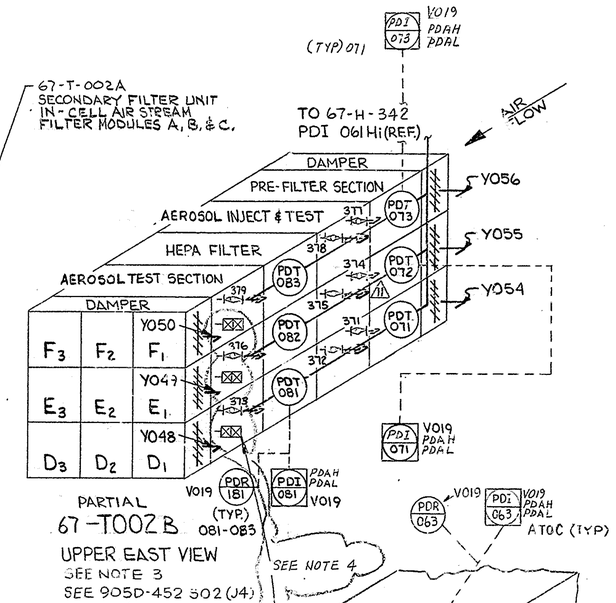

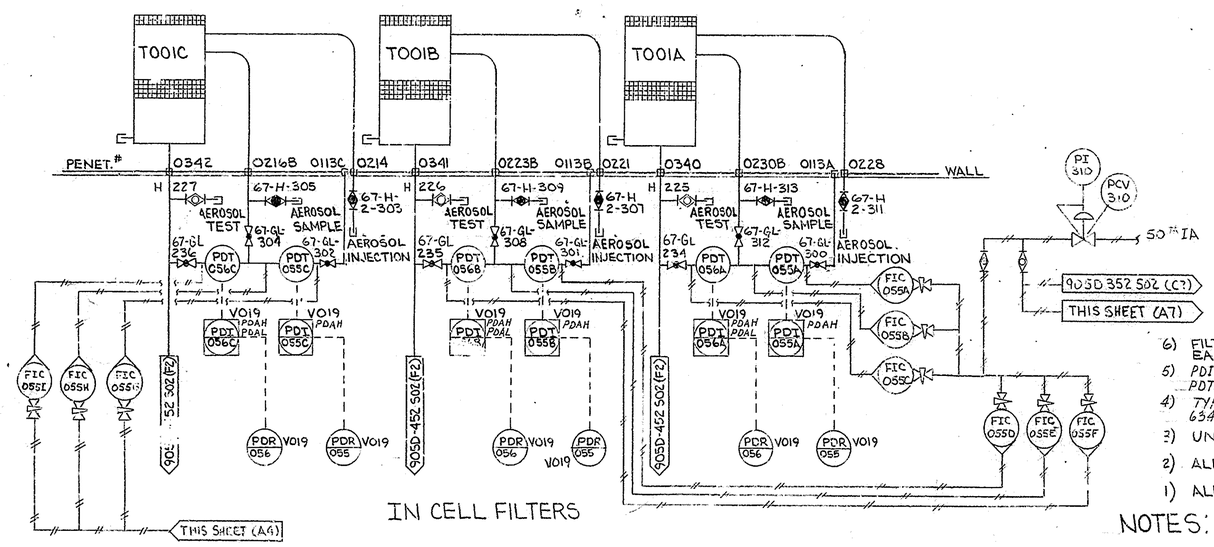

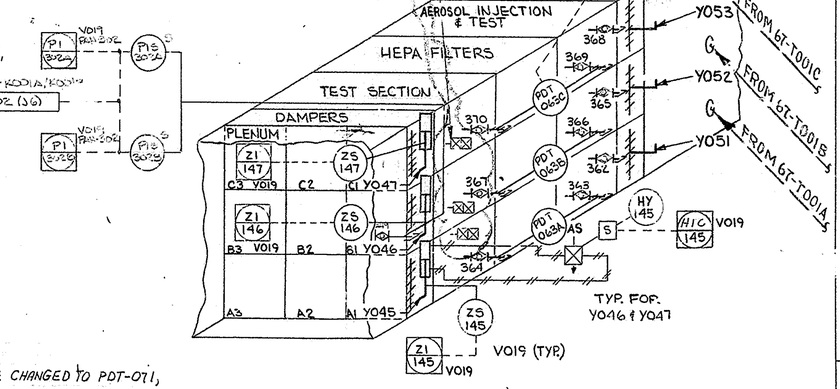

NOTES:

6) FILTER MODULES A THRU F HAVE 3 FILTERS EACH. G THRU L 2 FILTERS EACH.
5) PDIS-071, PDIS-073, PDIS-076 & PDIS-078 ARE CHANGED TO PDT-071, PDT-073, PDT-076 AND PDT-078
4) TYP (6 PLACES THIS SIDE, 6 PLACES FAR SIDE) DUST CAP, KAMVELOK MODEL 634BS.S. WITH VITON GASKET OR EQ, SHOULD BE INSTALLED WHEN FITTING IS NOT IN USE.
3) UNLESS OTHERWISE NOTED ALL BALL VALVES ARE PRECEEDED BY 67-H-XXX
2) ALL INSTRUMENTATION ON THIS SHEET EXCEPT ON AHU V001 TO BE SEISMIC.
1) ALL GATE VALVES ARE 67-GT-1/2-XXX UNLESS NOTED OTHERWISE

QTY REQD	ITEM NO.	NOMENCLATURE OR DESCRIPTION	PART OR IDENTIFYING NO.	MATERIAL OR SPEC

PARTS LIST

REV	DESCRIPTION	APV'D
0	ADDED THIS SH. PER ECN 33370 CHKD 2/17/90 DRS CHKD 8/13/90 DRS ER 19423	
1	GEN. REV. PER ECN 3982 1129-90 CGR CHKD. 12/5/90 DRS	
2	REV. PER ECN 4731 BY CW 2-18-92	
3	GEN REV/ECN 5041 11-22-92	DR KQ
4	REV/ECN 6622 8-27-93	PC
5	GEN REV/ECN 7470 5-17-94	
6	GEN REV/ECN 9071 KGR 11-14-94	
7	REV/ECN 9041 RHS 6-27-95	
8	REV/ECN 9299 RHS 10-16-95	
9	REV/ECN 9937 SRD 6/18/96	DS
10	ECN 10005 BY CW 7-10-96	
11	ECN 10649 MAC 6/10/97	
12	ECN 11704 CGR 11-4-98	
13	ECN 11966 CW 7-9-99	

UNLESS OTHERWISE SPECIFIED
TOLERANCES-DO NOT SCALE
2 PL DEC ± | 3 PL DEC ± | ANGLES ± | AA
FRACTIONS ±
D.SPEC.NO. ——
NEXT ASSEMBLY

DRAFTER	C. ROBLEE	DATE 1-30-90
CHECKER	ION SHAFFER	DATE 8-28-90
ENGR.	E.W. SHERMAN	DATE 8/21/90
COG.ENG.APPVL	V. DESIGNO	DATE 8-22-90
E&DS APPVL		DATE 8/28/90
Q.A.APPVL		DATE 9/30/90
DFTG.SUPR.		DATE 8/30/90

A/E CONTRACT NO.
CODE IDENT. NO.
FOR
West Valley Nuclear Services Co., Inc.
West Valley, New York

VITRIFICATION SYSTEM HVAC P&ID VITRIFICATION FACILITY

DWG SIZE D | SCALE | WEIGHT | DWG NO. 905D-452 | REV. 13
A/E DWG NO. 905D-452S03 | SHEET 3 OF 4

REPROCRAFT