VERIFY ALL DOCUMENTS FOR CURRENT REVISION AND PENDING CHANGES PRIOR TO EACH USE.
INIT_____ DATE_____

905-D-452S02

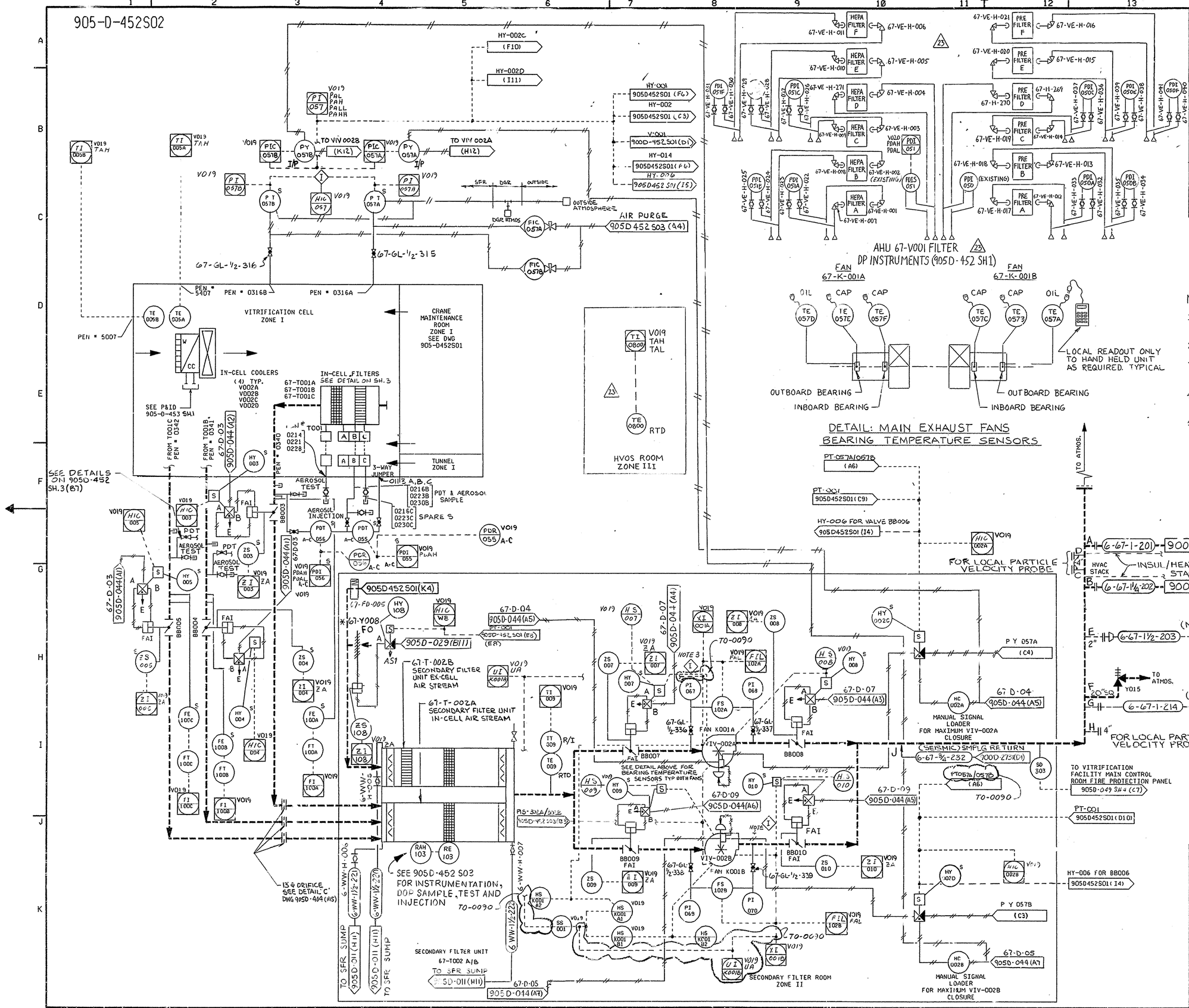

DETAIL: MAIN EXHAUST FANS BEARING TEMPERATURE SENSORS

NO.	DATE	REVISION	DR	CH	APPROVED
0	7/19/89	ER 1649			
14	10/5/95	ECN 9285	BP	KG	
15	12-29-95	REV. PER ECN 9486	GW	DRS	JEY
16	3-5-96	REV. PER ECN 9665	MJC	HRS	
17	4-1-96	ECN 9746	GW	HRS	
18	5-20-96	REV/ECN 9814	RMS	HRS	
19	5-31-96	REV/ECN 9915	RMS	PAH	
20	7-9-96	REV. PER ECN 10005	GW	EJS	HE
21	8-14-96	ECN 10125	RMS	DRS	
22	10-29-98	ECN 11651	WCK	HRS	
23	5-18-2000	ECN 11765A	CAM	HRS	
11	11-14-94	GEN REV/ECN 8079	KGZ	CJS	
12	1-12-95	REV/ECN 8480	RMS	DRS	HE
13	3-27-95	ECN 8655	GW	CJS	HE

NOTES

1. (TAG NO. S) DENOTES SEISMICALLY QUALIFIED INSTRUMENTATION.
2. FOR OTHER NOTES SEE DWG 905-D-452S01
3. EXH FAN K-001H GIVES PERMISSIVES TO DAMPERS BB-001, 002, 006, 007, 008, 011, 014, INLET VANE VIV-002A AND INTERLOCK EXH FAN K-001B
4. EXH FAN K-001G GIVES PERMISSIVES TO DAMPERS BB-001, 002, 006, 009, 010, 014, INLET VANE VIV-002B AND INTERLOCK EXH FAN K-001.
5. *REFER TO WVNS DRAWING 905D-049 SH4&10 FOR HVAC & DAMPER CONTROL CHART FOR FIRE PROTECTION SYSTEM.

REFERENCE DRAWINGS

1) FOR REFERENCE DRAWINGS SEE DWG 905-D-452S01
2) STACK SMPLG SYS P&ID DWG 900D-2731

WVNS APPROVAL
COG. MGR.
COG. ENGR.
DRFT. SUPR.
Q.A. MGR.
R&S MGR.

FOR DRAWING INDEX SEE DRAWING NO.

APPRVD WVNS CO.		EBASCO SERVICES INCORPORATED A/E O.F.S. NO. 2388 TASK ORDER 009
PROJECT MGR	6/28/89	FOR WEST VALLEY NUCLEAR SERVICES COMPANY, INC WEST VALLEY, NEW YORK
ENGINEER SUPV	6/28/89	
LEAD DISC ENGR	6/28/89	WEST VALLEY DEMONSTRATION PROJECT
DESIGN	6/28/89	VITRIFICATION SYSTEM HVAC P&ID VITRIFICATION FACILITY
CHECKED	6/28/89	
DRAWN B. INGANAMORTE	DATE 6/28/89	
DE-AC07-81NE44139 PROJECT NO.	SIZE D	INDEX CODE NUMBER AREA DR. TYP CL ORIG; DRAWING NO. 905D-452; REV. 23
19-CWV-02275 SUBCONTRACT NO.		
ISSUED FOR CONSTRUCTION	SCALE NONE	SPEC. CODES; A/E SHEET NO. 905-D-452S02 2; SHT.