VERIFY ALL DOCUMENTS FOR CURRENT REVISION AND PENDING CHANGES PRIOR TO EACH USE.
INIT_____ DATE_____

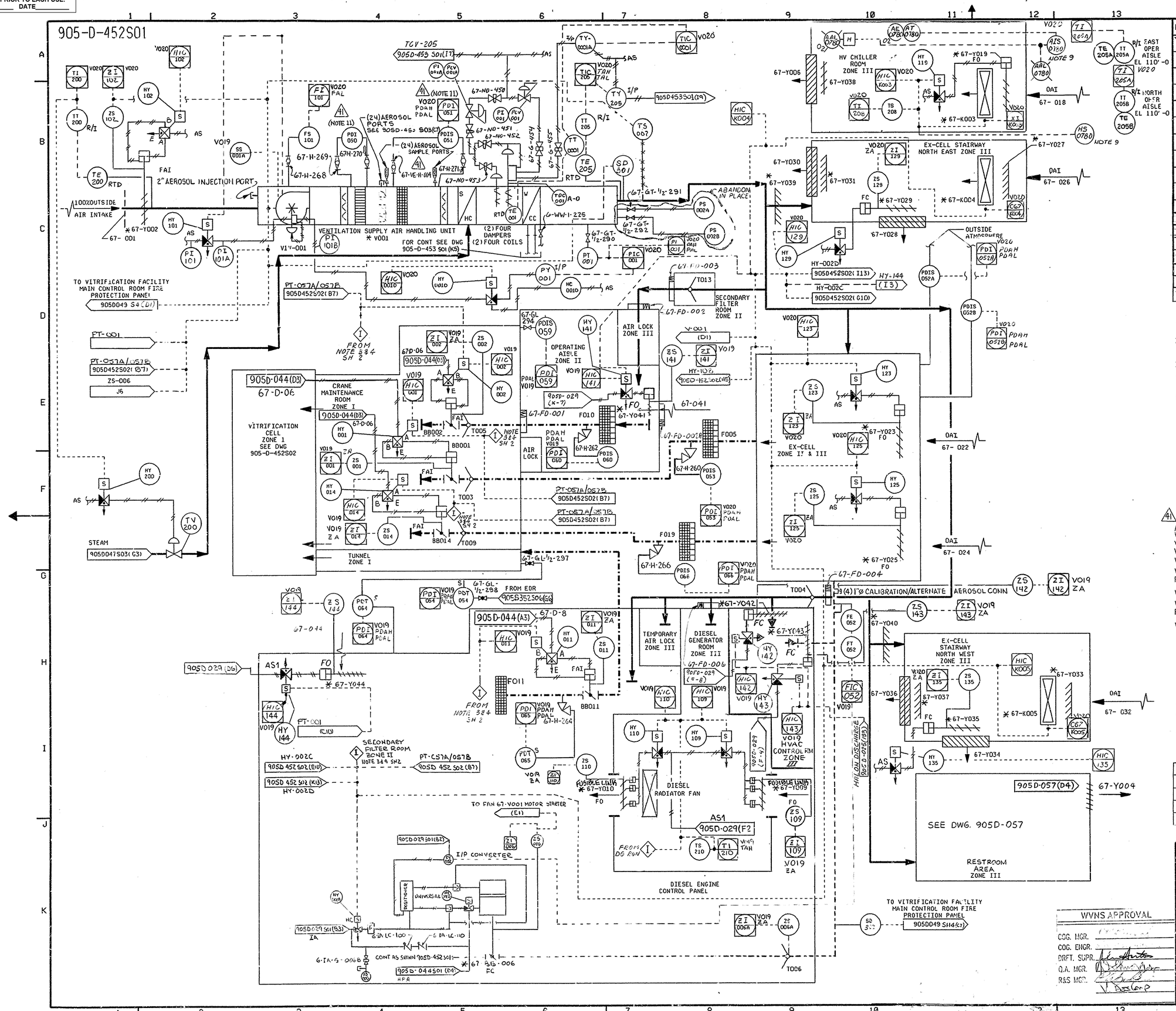

NO.	DATE	REVISION	DR	CH	APPROVED	
B	02-27-87	GENERAL REVISION	RJL	WL	FF	JGK MDW
C	05-19-87	GENERAL REVISION	TJK	WWL	FF	JGK MDW
D	11-25-87	GENERAL REVISION PER EBAR 840A & TA 622 DATED 10-29-87	TJK	WWL	JGK	JGK MDW
E	08-31-88	GENERAL REVISION PER EBAR 1180	DFR	WWL	JB	MAB MDW
F	6/23/89	GENERAL REVISION PER EBAR 1180	PJS	PJL	FJS	[illegible]
0	7/19/89	ER 1649			[illegible]	
38	6-12-97	ECN 10638	GW	DRS		
39	11-4-98	ECN 11704	CGR	[illegible]		
40	7-12-99	ECN 11996	GW			
41	5-22-2000	ECN 11765A	CAM			
35	10-22-96	ECN 10299	FAS	DRS		
36	12-17-96	ECN 10343	BP	[illegible]		
37	1-20-97	ECN 10458	JHS	[illegible]		

NOTES

1. FOR SYMBOLS, NOTES AND LEGEND SEE DRAWINGS 900-D-1306, 1307 & 1308.
2. ALL EQUIPMENT IN THE SECONDARY FILTER ROOM AND CRANE MAINT. ROOM SHALL BE SEISMICALLY QUALIFIED EQUIPMENT AND SHALL BE SEISMICALLY SUPPORTED.
3.
4. ALL TAG NUMBERS ARE PREFIXED BY SYSTEM NUMBER 67 UNLESS OTHERWISE NOTED
5. (TAG NO. A-Z) REPRESENTS SEPARATE INSTRUMENTS TAG NUMBERS WITH SUFFIXES A, B, C, --Z.
6. AS = 50 PSIG, ASI = 20 PSIG
7. (TAG NO. V019) REPRESENTS DESIGNATED CONTROL PANEL. SHARED DISPLAY SYMBOLS PER ISA-S5.5 (1982) INDICATES ART DISPLAY OR KEYBOARD CONTROL
8. AS - REPRESENTS INSTRUMENT AIR SUPPLY SEE REFERENCED DWG 905-B-376 AND 905-B-352 BELOW.
9. LOCATED OUTSIDE CHILLER ROOM DOOR, IN NE STAIRS.
10. * REFER TO WVNS DRAWING 905D-049 SH 4 & 6 FOR HVAC & DAMPER CONTROL CHART FOR FIRE PROTECTION SYSTEM NOTES: CONT (G1)
11. SEE 905D-452 SH2 FOR AHU 67-V001 FILTERS DP INSTRUMENTS

REFERENCE DRAWINGS:

V.F. HVAC STEAM SYSTEM P&ID	905-D-047S03
V.F. FIRE PROTECTION P&ID	905-D-049
V.F. VENTILATION SYSTEM PLAN EL 100.00'	905-D-401
V.F. VENTILATION SYSTEM SECTIONS	905-D-402
V.F. SECONDARY HEPA FILTER RM PLAN EL. 100.00'	905-D-403
V.F. SECONDARY HEPA FILTER RM SECTIONS	905-D-404
V.F. VENTILATION SYSTEM PLANS & SECTIONS	905-D-405
V.F. VENTILATION SYSTEM PLAN EL. 124.00'	905-D-406
V.F. HVAC-INSTRUMENTATION PIPING PLAN EL. 100.00'	905-D-409
VITRIFICATION FACILITY AIR FLOW DIAG.	905-D-450
VITRIFICATION FACILITY INST. & UTILITY AIR P&ID	905D-029
VITRIFICATION FACILITY AIR FLOW DIAG. CONTROL ROOM	905-D-451
VITRIFICATION FACILITY HVAC CHILLED WATER SYSTEM P&ID	905-D-453 AND 905-D-454
INSTRUMENT LOCATION ARRANGEMENTS	905-D-370 AND 905-D-378 905-B-376 905-B-352

INSTRUMENT INSTALLATION DETAILS

26	12-28-95	ECN 9501	JHS	[illegible]			
27	02-07-96	ECN-9470, 9619	SAB	[illegible]			
28	02-20-96	ECN-9644	SAB	[illegible]			
29	4-3-96	ECN-9703	BP	[illegible]			
30	5-30-96	GEN/ECN 9724, 9796	JHS	[illegible]			

FOR DRAWING INDEX SEE DRAWING NO. _____

APPRVD WVNS CO.		EBASCO SERVICES INCORPORATED A/E O.F.S. NO. 2388 TASK ORDER 009
PROJECT MGR M. D. WEINGART	08-15-86	FOR WEST VALLEY NUCLEAR SERVICES COMPANY, INC WEST VALLEY, NEW YORK
ENGINEER SUPV J. G. KALAGASSY	08-15-86	
LEAD DISC ENGR J. G. KALAGASSY	08-15-86	WEST VALLEY DEMONSTRATION PROJECT
DESIGN K. GOBIN	08-15-86	VITRIFICATION SYSTEM HVAC P&ID VITRIFICATION FACILITY
CHECKED Y. JAGANNATH	08-15-86	
DRAWN R. J. LEWKO	DATE 08-15-86	
DE-AC07-81NE44139 PROJECT NO.		SIZE D; INDEX CODE NUMBER: AREA, DR. TYP, CL, ORIG; DRAWING NO. 905D-452; REV. 41
19-CWV-02275 SUBCONTRACT NO.		
ISSUED FOR CONSTRUCTION	SCALE NONE	SPEC. CODES; A/E SHEET NO. 905-D-452S01 of 4

WVNS APPROVAL

COG. MGR.
COG. ENGR.
DRFT. SUPR.
Q.A. MGR.
R&S MGR.

FILE NAME: 9504524 REV. 06 UID: (133, 0641)
PLOT REQ NO. PJ22705 DATE: 06-27-89