VERIFY ALL DOCUMENTS FOR CURRENT REVISION AND PENDING CHANGES PRIOR TO EACH USE.
INIT_____ DATE_____

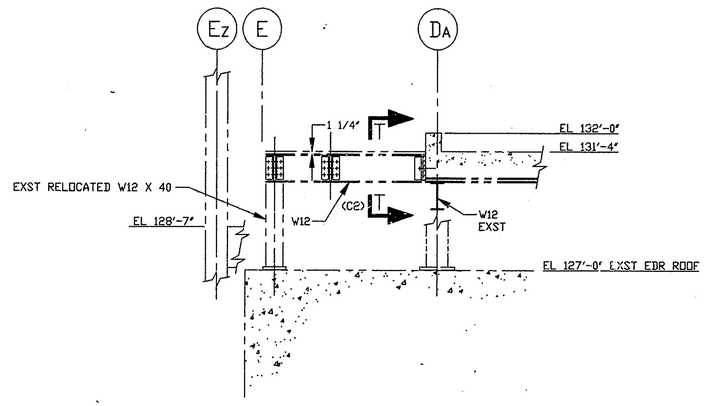

SECTION S-S (B8)

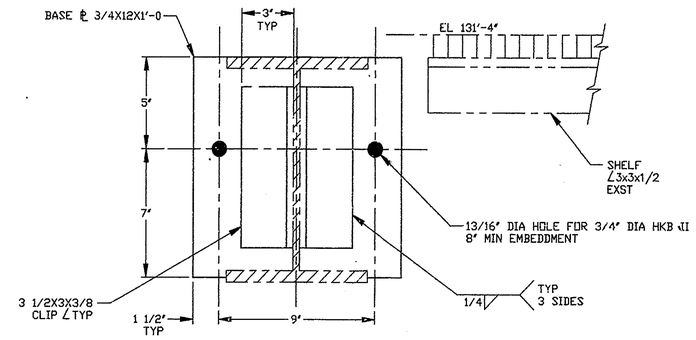

NOTE: REMOVE SHELF ∠3X3X1/2 TO CLEAR BASE ℄ AND ADD HILTI BOLT

SECTION T-T (D5)

SCALE: 3"=1'-0"

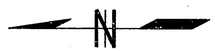

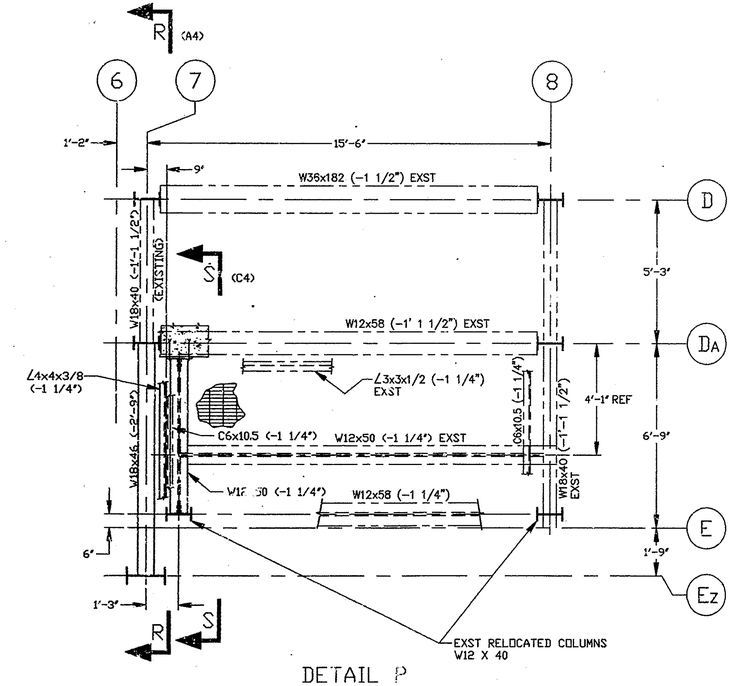

DETAIL P

PLAN @ EL 131'-4"

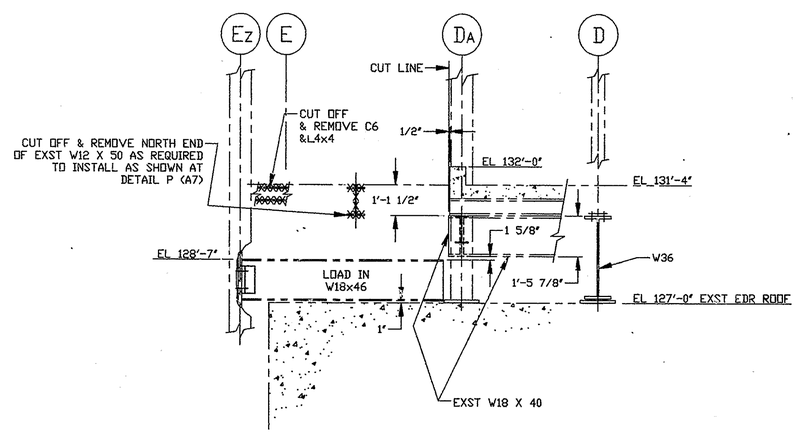

SECTION R-R (C8)

REV	DESCRIPTION	APV'D
0	ER 93-92 CREATED PER FCN TM-0148	

REVISIONS

UNLESS OTHERWISE SPECIFIED ALL DIMENSIONS IN INCHES

TOLERANCES: 2PL DEC ± N/A; 3PL DEC ± N/A; FRACTS ±1/16; ANGLES ± N/A; FINISH N/A; DO NOT SCALE DRAWING

FILE NAME E197D002

PLOT SCALE 1=32.00

D SPEC NO. FTM014@

NEXT ASSEMBLY

DRAFTER L. KOMENDA DATE 5/9/95

CHECKER K. QUEALY DATE 6/13/95

ENGINEER M. MILTON DATE 6/13/95

DATABASE LINKED DRAWING.

SEE ENGINEERING RELEASE FORM (ER) FOR DRAWING APPROVAL SIGNATURES.

A/E CONTRACT NO.

CODE IDENT NO.

FOR WEST VALLEY NUCLEAR SERVICES CO. INC. WEST VALLEY N.Y.

VITRIFICATION FACILITY
CMR OPERATING AISLE
STRUCTURAL FRAMING

DWG SIZE D

SCALE 3/8"=1'-0"

WEIGHT

DWG NO. 905D-197

REV 0

A/E DWG NO.

SHEET 2 OF

CAD DRAWING-DO NOT REVISE THIS ORIGINAL