VERIFY ALL DOCUMENTS FOR CURRENT REVISION AND PENDING CHANGES PRIOR TO EACH USE.
INIT_____ DATE_____

REV NO	DATE	REVISION	DR	CH	APPROVED
0	7/22/88	ER 1408			
1	8/2/88	REV. PER ECN 2553	WAB	RPV	RPV
2	11-14-89	REV. PER ECN 3229	GW	DRS	VAD
3	6-15-90	REV. PER ECN VF-1-158	GW	HAB	CM
4	11-6-91	REV PER ECN 4555	PD	DRS	CM
5	5-18-95	GEN REV/ECN 8804	DPK	DRS	
6	8-28-95	ECN 9163	PD	LP	CHC

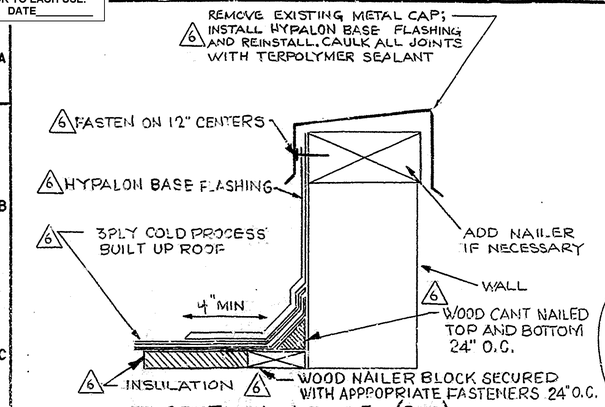

SECTION AE-AE (I12)
PARAPET FLASHING DETAIL
N.T.S.

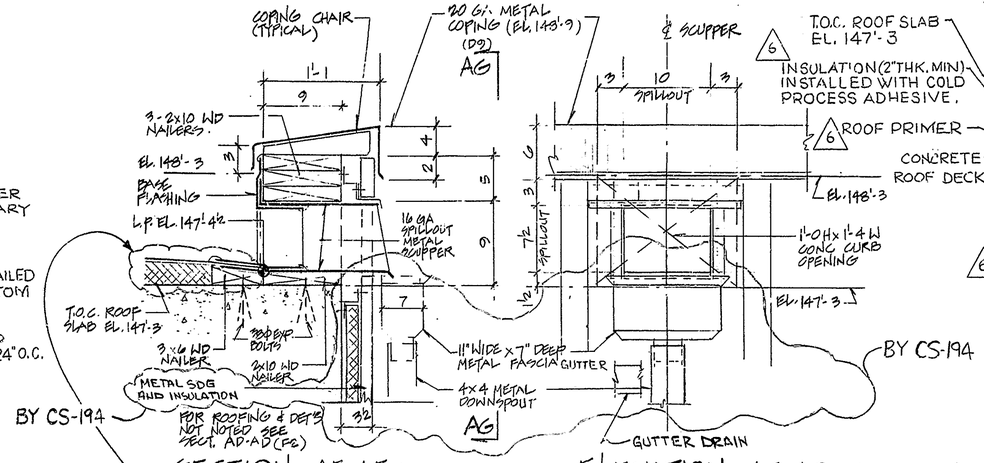

SECTION AF-AF (I12)
1½ = 1'-0

ELEVATION AG-AG (A7)
½ = 1'-0

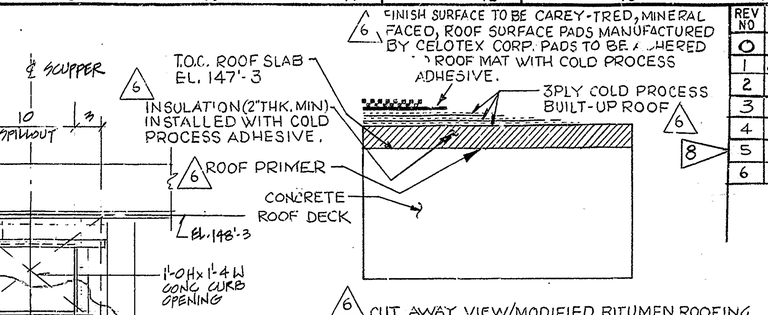

CUT AWAY VIEW/MODIFIED BITUMEN ROOFING CONSTRUCTION DETAIL
N.T.S.

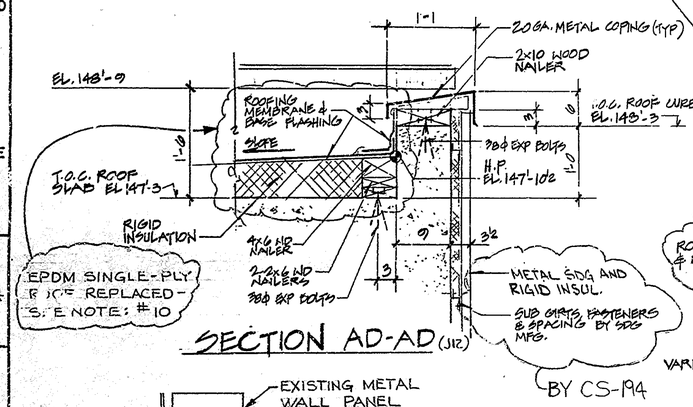

SECTION AD-AD (J12)

EPDM SINGLE-PLY ROOF REPLACED - SEE NOTE: #10

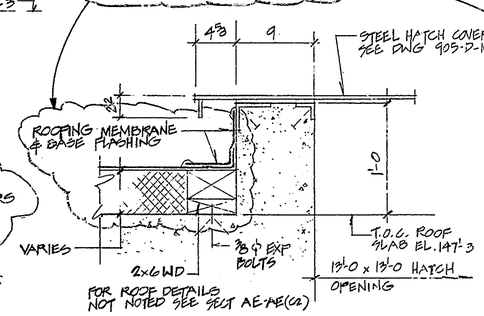

SECTION AH-AH (T11)
1½ = 1'-0

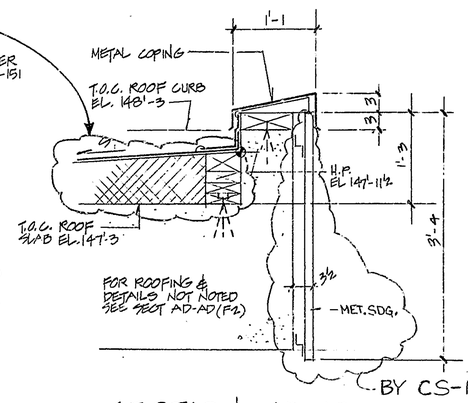

SECTION AB-AB (K10)
1" = 1'-0

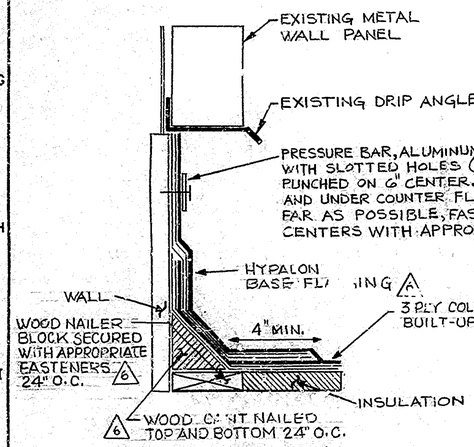

SECTION AC-AC (J10)
METAL WALL FLASHING
N.T.S.

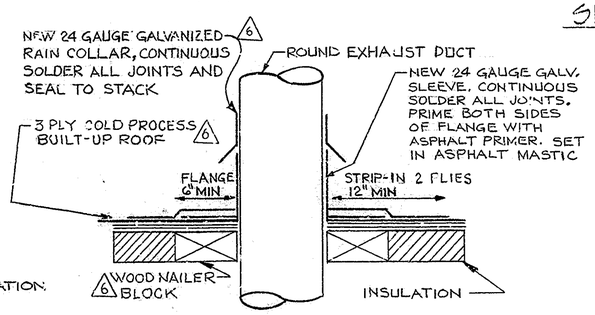

36" DIAMETER EXHAUST DUCT (K10)
PENETRATION & FLASHING DETAIL
N.T.S.

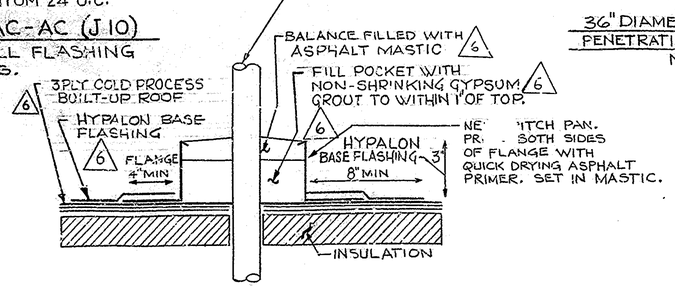

TYP PITCH PAN DETAIL (J11)
N.T.S.

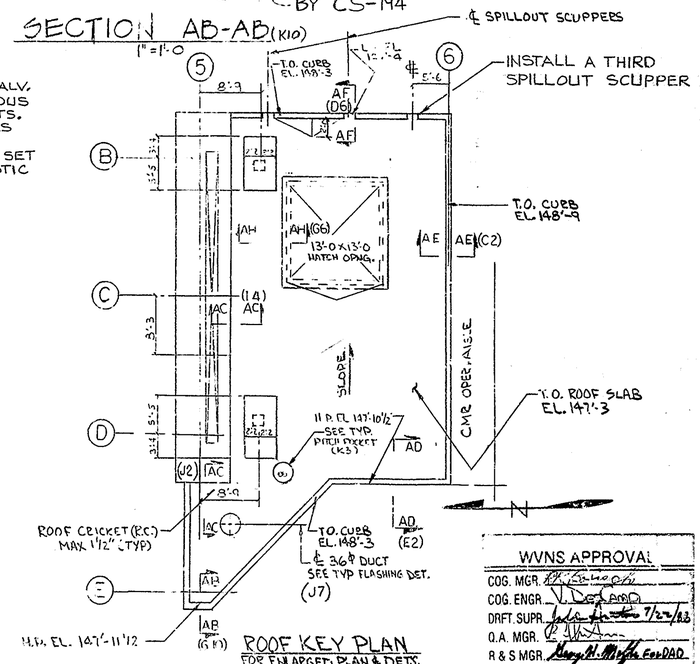

ROOF KEY PLAN
FOR ENLARGED PLAN & DETS. SEE DWG 905D-149
NO SCALE

NOTES:

1. FOR METAL FASCIA SUMPS, COPING & COPING CHAIRS ETC. BY "HICKMAN CONSTRUCTION PRODUCTS" OR APPROVED ALTERNATE
2. ALL WOOD NAILERS SHOWN ARE "WOLMANIZED" PRESSURE TREATED LUMBER, OR APPROVED EQUAL.
3. COLOR OF NEW METAL TO MATCH EXISTING - SONOCO (SUMMIT) ARCHITECTURAL "LIMESTONE"
4. COLOR OF NEW METAL FASCIA, SUMPS, COPINGS, GUTTERS & DOWNSPOUTS TO MATCH EXISTING - SONOCO (SUMMIT) ARCHITECTURAL "BRONZE"
5.
6. ALL EXP BOLTS SHALL BE 3/8"ϕ x 5" LONG x 3'-0 O.C. TYP U.N. (CORROSION RESISTANT) HILTI KWIK BOLTS № 38-5.
7. INSTALL NEW PITCH POCKETS AROUND STRUCTURAL STEEL HANDRAIL POSTS AND MONORAIL SUPPORT COLUMNS SHOWN IN DWG. 905D-154, SHT. 1 & 2.
8. ALL WORK ON THIS REVISION PER TO-OC 3
9. DOUBLE ROW EXP BOLT SPACING, SHALL BE STAGGERED ONE TO EACH OTHER TO PREVENT SLAB CRACKS.
10. INSTALL HIGH PERFORMANCE MULTI-PLY ROOFING SYSTEM IN ACCORDANCE WITH: WVNS-CS-139 SECT. 07536 - MODIFIED BITUMEN ROOFING.

REFERENCE DRAWINGS:

ROOF PLAN	905-D-149
CMR OPERATING AISLE ARCH PLANS & DETAILS	905-D-195
MISCELLANEOUS STEEL CMR HATCH COVERS	905-D-151
CRANE HOIST PLAN & SECTIONS BY CS-194	900-D-2722

THIS DWG. IS PART OF CS-134 EXCEPT AS NOTED AT ZONES: (D5), (D10), (F4), (G10), (G2) AND RELATED DETAILS

FOR DRAWING INDEX SEE DRAWING NO.

APPRVD WVNS CO.	
PROJECT MGR	7/7/89
ENGINEER SUPV	7/7/89
LEAD DISC ENGR	7-7-89
DESIGN J. SANTOSPIRITO	7-5-89
CHECKED A. GROSS	7-5-89
DRAWN J. SANTOSPIRITO	DATE 7-5-89
DE-AC07-81NE44139 PROJECT NO.	
19-CWV-02275 SUBCONTRACT NO.	
ISSUED FOR CONSTRUCTION	

EBASCO SERVICES INCORPORATED
A/E O.F.S. NO. 2388 TASK ORDER 000
FOR
WEST VALLEY NUCLEAR SERVICES COMPANY, INC
WEST VALLEY, NEW YORK

WEST VALLEY DEMONSTRATION PROJECT
VITRIFICATION FACILITY
ARCHITECTURAL ROOF DETAILS

WVNS APPROVAL
COG. MGR.
COG. ENGR.
DRFT. SUPR. 7/22/89
Q.A. MGR.
R & S MGR.
PROJ. MGR.

SIZE	INDEX CODE NUMBER				DRAWING NO.	REV.
	AREA	DR. TYP	CL	ORIG		
D					905D-193	6

SCALE | SPEC. CODES | A/E SHEET NO. 905-D-193 A