VERIFY ALL DOCUMENTS FOR CURRENT REVISION AND PENDING CHANGES PRIOR TO EACH USE.
INIT_____ DATE_____

165

REV NO	DATE	REVISION	DR	CH	APPROVED
0	5/31/88	ER1376		M	
1	8-2-88	REV PER ECN 2554	GW	RPV	RPV
2	2-28-89	REV'D PER ECN 2735	CTC	Sm	Sm
3	11-10-89	REV. PER ECN 3111	GW	DRS	Sm

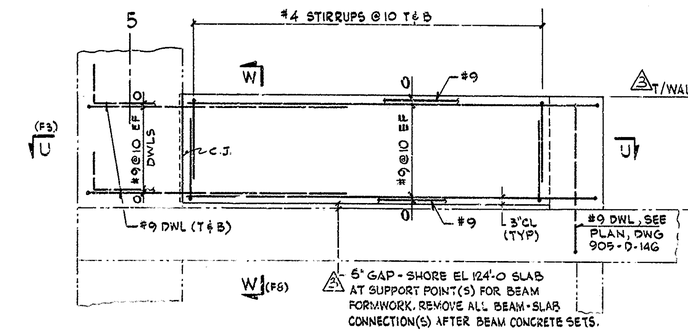

ELEVATION S-S (H4/D-146)

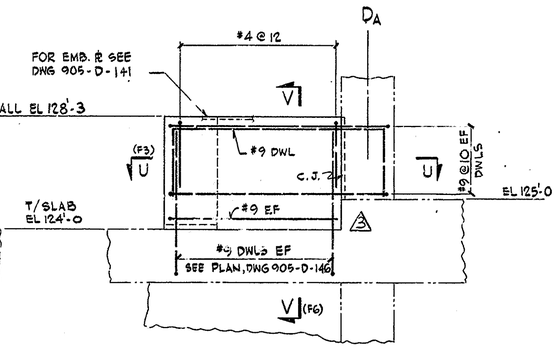

ELEVATION T-T (H4/D-146)

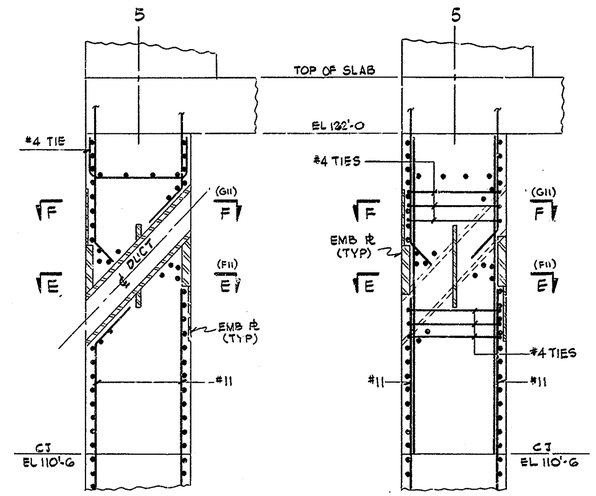

TYP. SECTION THRU DUCT

TYP. SECTION BETWEEN DUCTS

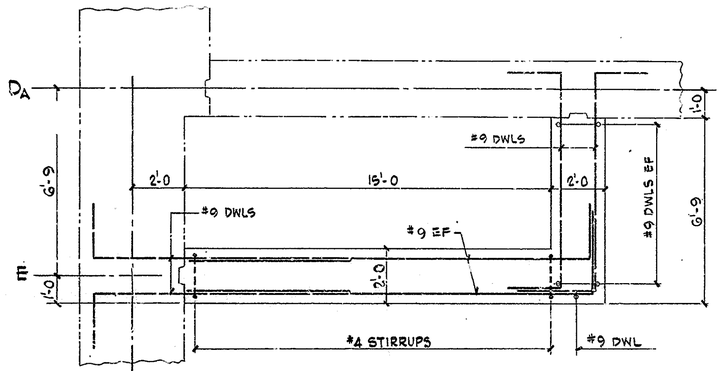

SECTION U-U (B1,B6)

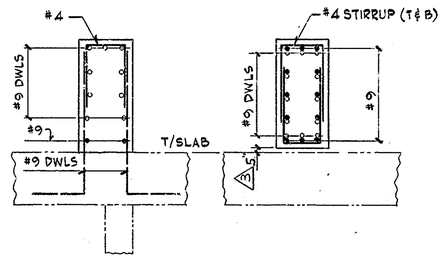

SECTION V-V (C7) SECTION W-W (C2)

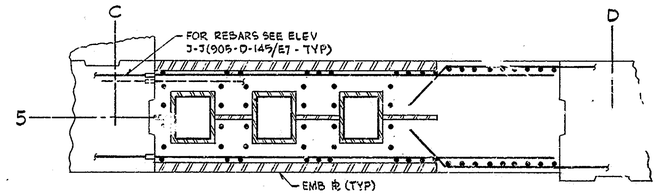

SECTION E-E (B11,B13)

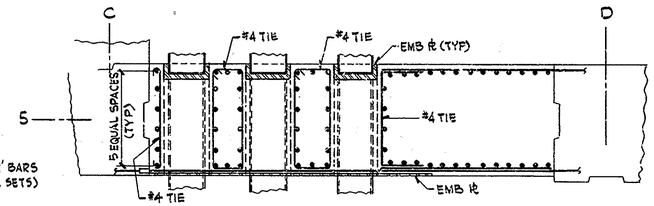

SECTION F-F (B11,B13)

NOTES: - ALL REBARS ARE #9, U.N.
- FOR BAR SPACING SEE ELEV J-J (E7) DWG 905-D-145.

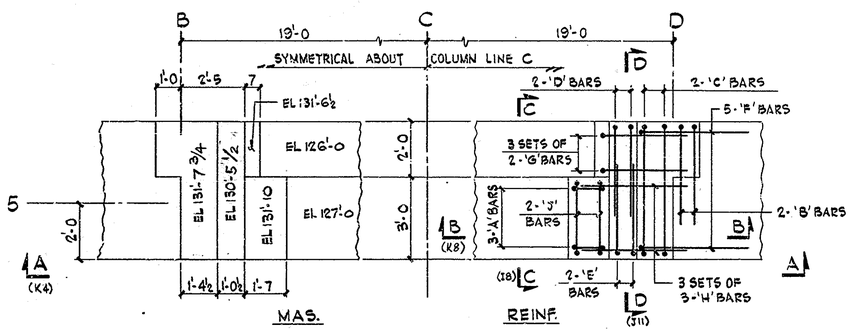

PART PLAN AT EL 132'-0 (905-D-147/C3,C7).

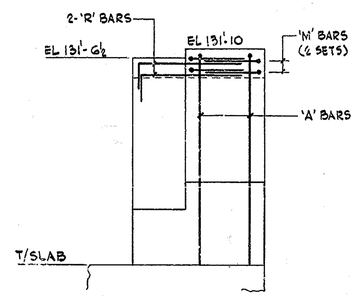

SECTION C-C (I4)

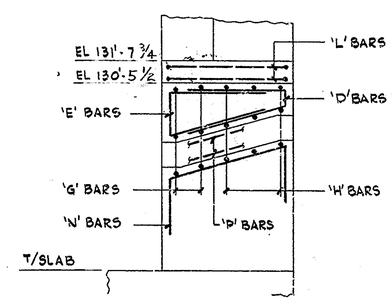

SECTION D-D (I5)

NOTES: (AT EL 132'-0 ONLY)
- ALL REBARS ARE #6.
- FOR REBARS NOT SHOWN SEE ELEV A-A, DRAWING 905-D-147 (F6).
- FOR EMBEDDED STEEL AND PENETRATION DETAILS SEE DRAWINGS 905-D-160 AND 9985-3-R2

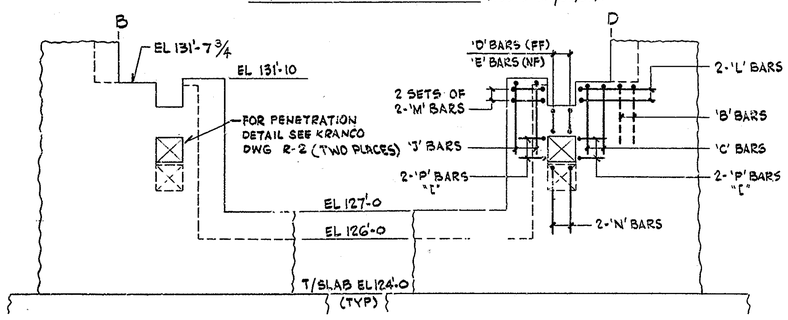

ELEVATION A-A (I1)

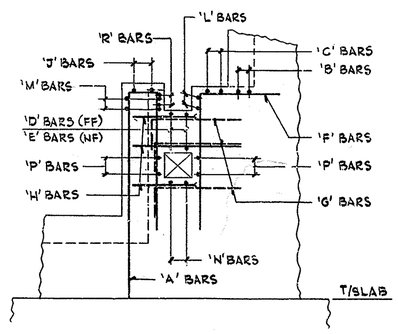

SECTION B-B (H3)

NOTES:

FOR GENERAL NOTES SEE DRAWING 905-D-122.
FOR ADDITIONAL REFERENCE DRAWINGS SEE DWGS 905-D-122 & 142.
FOR ADDITIONAL REBARS AT OPENINGS SEE DWG 905-D-145.

REFERENCE DRAWINGS:

FOUNDATION, PLAN AT EL 100'-0	905-D-122
WALL ELEVATIONS, M & R-SH1, FROM EL 100'-0 TO EL 122'-0	905-D-142
PLAN AT EL 124'-0	905-D-146
WALL ELEVATIONS, M & R-SH1, FROM EL 124'-0 TO EL 145'-3	905-D-147
WALL PENETRATIONS-SH1, FROM EL 124'-0 TO EL 147'-3	905-D-160
(BY CS-139) - MISCELLANEOUS STEEL STACK ENCLOSURE	905-D-191
V.F. WALL ELEVATIONS, M & R-SH4, FROM EL 100'-0 TO EL 122'-0	905-D-145
RUNWAY CONDUCTORS SYSTEMS-EMBEDS & PENETR. (KRANCO DWG)	R-2

WORK THIS DRAWING WITH DWGS 905-D-145 THRU 147.

FOR DRAWING INDEX SEE DRAWING NO.

WVNS APPROVAL	
COG. MGR.	
COG. ENGR.	
DRFT. SUPR.	
Q.A. MGR.	
RMS MGR.	
PROJ. MGR.	

APPRVD WVNS CO.		EBASCO SERVICES INCORPORATED A/E C.F.S. NO. 2388 TASK ORDER 009
PROJECT MGR M.D. Wengert	5/16/88	FOR: WEST VALLEY NUCLEAR SERVICES COMPANY, INC WEST VALLEY, NEW YORK
ENGINEER SUPV	5/16/88	
LEAD DISC ENGR	5/16/88	WEST VALLEY DEMONSTRATION PROJECT
DESIGN E. Parashurama	5/10/88	VITRIFICATION FACILITY
CHECKED S. Cassidy	5/10/88	WALL DETAILS
DRAWN V. SEKEERKA	DATE 1/21/88	
DE-AC07-81NE44139 PROJECT NO.		SIZE D; INDEX CODE NUMBER: AREA, DR. TYP, CL, ORIG; DRAWING NO. 905-D-165; REV. 3
19-CWV-02275 SUBCONTRACT NO.		
ISSUED FOR CONSTRUCTION		SCALE 3/8"=1'-0; SPEC. CODES; A/E SHEET NO. 905-D-165 A