VERIFY ALL DOCUMENTS FOR CURRENT REVISION AND PENDING CHANGES PRIOR TO EACH USE.
INIT_____ DATE_____

-161

REV NO	DATE	REVISION	DR	CH	APPROVED
B	5-16-88	~~GENERAL REVISION~~	DB	MH	
0	5/31/88	ER 1376		M	
1	8/2/88	ECN 2554	RR	RRV	
2	3/6/91	PER: ECN 4177	TTI	HAB	VM
3	3-14-95	REV PER TN-0099	MIL	DRS	MEM

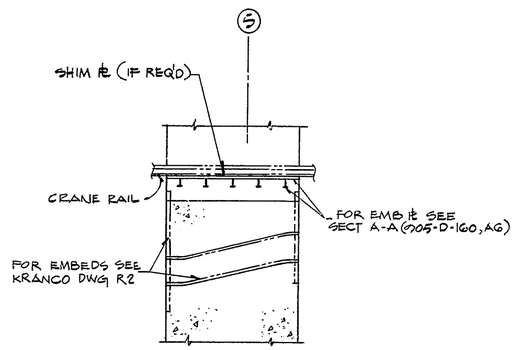

SECTION C-C AS SHOWN (905-D-160, D7)
SECTION C'-C' OPP HAND (905-D-160, D3)
3/8 = 1'-0

NOTE:
1- FOR GENERAL NOTES SEE DWG. 905-D-122
2- FOR NOTES, LEGEND AND REF. DRAWINGS SEE DWG. 905-D-160

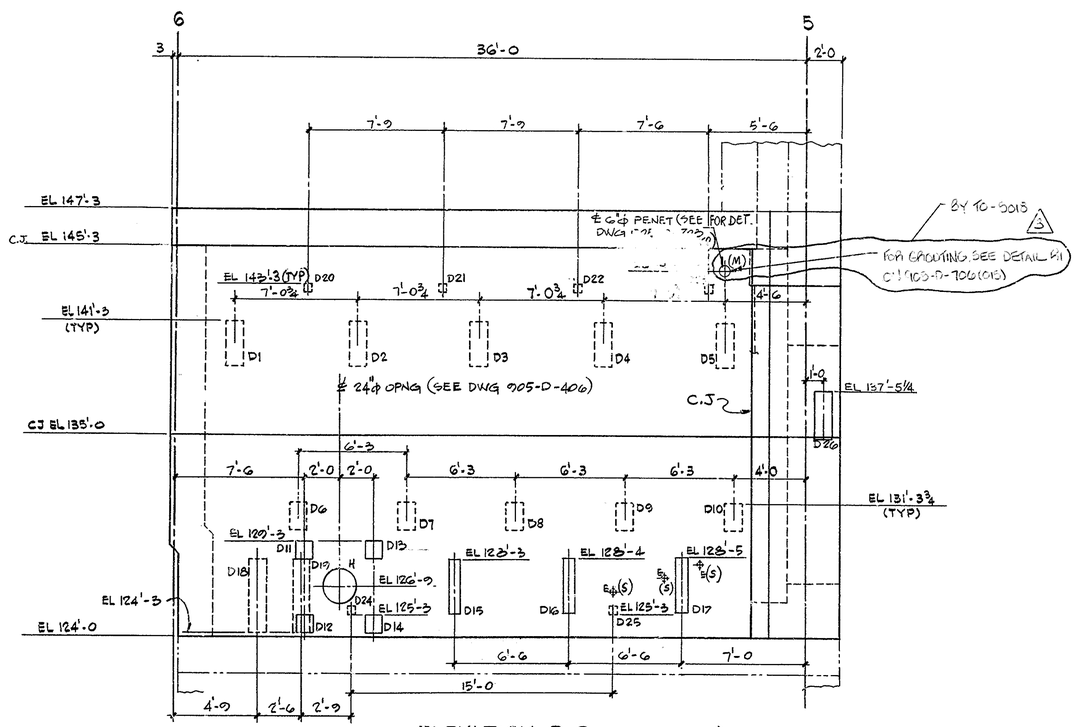

ELEVATION D-D (905-D-160, J11)
¼" = 1'-0

FOR ELEC PENETRATIONS SEE DWG 905-D-244

EMBEDDED PL'S SCHEDULE FOR ELEV. D-D

MARK	LOC	DISC	TYPE	REMARKS
D 1	I 2	C	II	L = 2'-6
D 2	I 3	C	II	L = 2'-6
D 3	I 4	C	II	L = 2'-6
D 4	I 5	C	II	L = 2'-6
D 5	I 6	C	II	L = 2'-6
D 6	J 2	C	II	L = 1'-6
D 7	J 3	C	II	L = 1'-6
D 8	J 4	C	II	L = 1'-6
D 9	J 5	C	II	L = 1'-6
D 10	J 6	C	II	L = 1'-6
D 11	J 3	C	I	—
D 12	K 3	C	I	—
D 13	J 3	C	I	—
D 14	K 3	C	I	—
D 15	J 4	H	VI	PL ¾ × 8 × 3'-0
D 16	J 5	H	VI	PL ¾ × 8 × 3'-0
D 17	J 5	H	VI	PL ¾ × 8 × 3'-0
D 18	K 2	E	II	L = 4'-0
D 19	K 3	E	II	L = 4'-0
D 20	H 3	E	III	PL ¾ × 6 × 0'-6
D 21	H 4	E	III	PL ¾ × 6 × 0'-6
D 22	H 5	E	III	PL ¾ × 6 × 0'-6
D 23	H 6	E	III	PL ¾ × 6 × 0'-6
D 24	K 3	E	III	SST PL ¾ × 6 × 0'-6
D 25	K 5	E	III	SST PL ¾ × 6 × 0'-6
D 26	K 6	C	II	L = 2'-6

WORK THIS DRAWING WITH DWG. 905-D-160

FOR DRAWING INDEX SEE DRAWING NO. _____

WVNS APPROVAL
COG. MGR.
COG. ENGR.
DRFT. SUPR.
Q.A. MGR.
R&S MGR.
PROJ. MGR.

APPRVD WVNS CO.		EBASCO SERVICES INCORPORATED A/E O.F.S. NO. 2388 TASK ORDER 009
PROJECT MGR M.D. Nowicki	6/12/87	FOR WEST VALLEY NUCLEAR SERVICES COMPANY, INC WEST VALLEY, NEW YORK
ENGINEER SUPV	6/12/87	
LEAD DISC ENGR	6/12/87	WEST VALLEY DEMONSTRATION PROJECT VITRIFICATION FACILITY WALL PENETRATIONS - SH2 FROM EL 124'-0 TO EL 147'-3
DESIGN R. Parashurama	6-12-87	
CHECKED M. Herbowska	6/12/87	
DRAWN V. Sekerka	DATE 6/12/87	
DE-AC07-81NE44139 PROJECT NO.	SIZE D	INDEX CODE NUMBER: AREA / DR. TYP / CL / ORIG — DRAWING NO. 905-D-161 — REV. 3
19-CWV-02275 SUBCONTRACT NO.		
ISSUED FOR CONSTRUCTION	SCALE AS NOTED	SPEC. CODES — A/E SHEET NO. 905-D-16' B