VERIFY ALL DOCUMENTS FOR CURRENT REVISION AND PENDING CHANGES PRIOR TO EACH USE.
INIT_____ DATE_____

D-160

REV NO	DATE	REVISION	DR	CH	APPROVED
B	5-16-88	~~GEN. REVISION~~	DB	MH	~~RAW~~ ~~RAW~~ ~~MADW~~
0	5/31/88	ER 13716		M	
1	8-2-88	REV. PER ECN 2554	RBH	RPV	RPV
2	2-28-89	REV'D PER ECN 2735	CTC	Sm	Sm
3	11-29-89	REV. PER ECN 3137	GW	DRS	Sm
4	1-16-90	REV. PER ECN 3399	GW	KMQ	DJR
5	3-28-90	REV. PER ECN VF-1-083 VF-1-091, VF-1-094	GW	[illegible]	Sm
6	2-11-91	REV. PER ECN VF-2A-088	GM	HB3	Sm A
7	3/6/91	PER ECN 4177	JH	HAB	Sm
8	11-6-91	PER ECN 4555	RD	DRS	Sm
	8-17-94	REV PER ECN 2373	GW	DRS	MEM
9	3-8-95	REV PER ECN [illegible]	MC	DRS	MEM

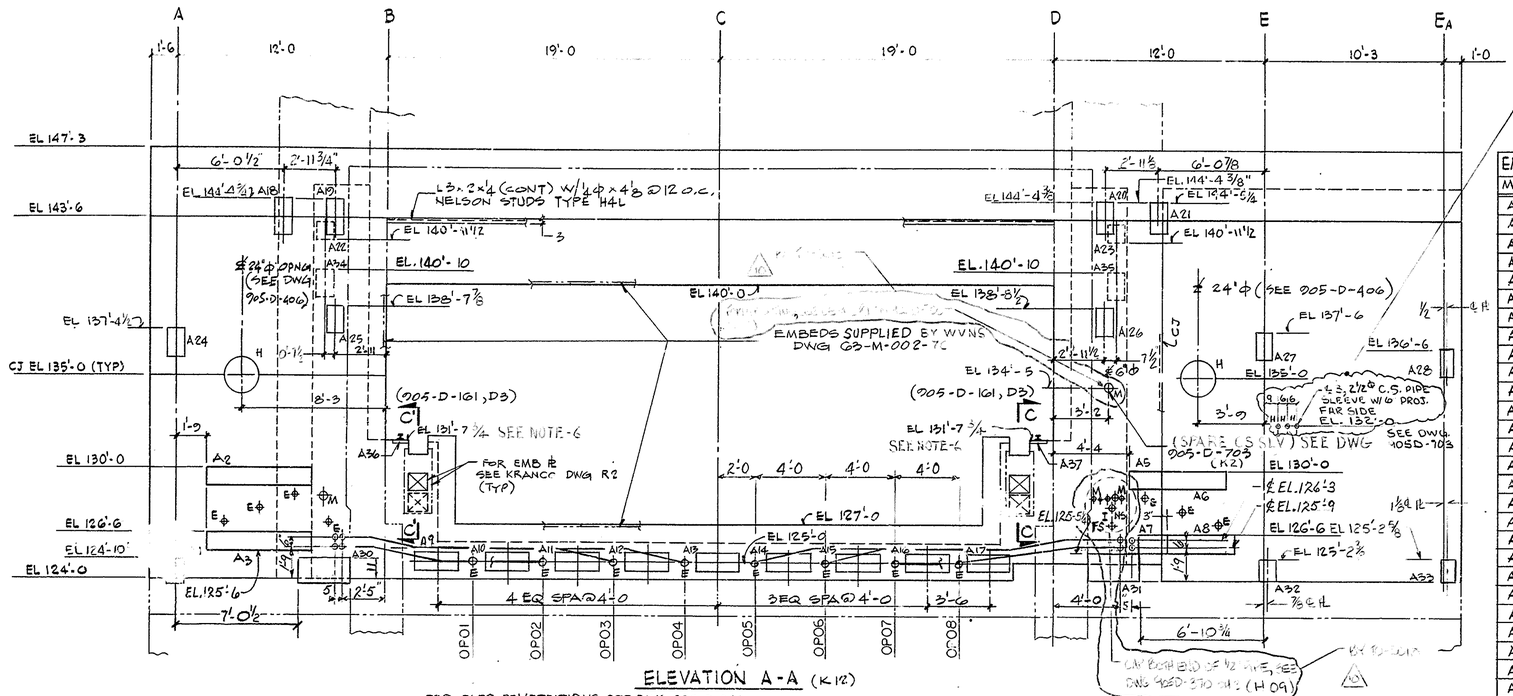

ELEVATION A-A (K12)

FOR ELEC PENETRATIONS SEE DWG 905-D-244
FOR MECH. PENETRATIONS SEE DWG 905-D-077
FOR I&C PEN. SEE 905-D-370 SH.3
FOR HVAC PEN. SEE 905-D-406

EMBEDDED ℞'S SCHEDULE FOR ELEV A-A				
MARK	LOC.	DISC	TYPE	REMARKS
A 1				
A 2	D2	E	XII	℞ ¾ × 12 × 6'-0
A 3	E2	E	XII	℞ ¾ × 12 × 6'-0
A 4				
A 5	D9	E	XII	℞ ¾ × 12 × 1'-11
A 6	D9	E	XII	℞ ¾ × 12 × 3'-10
A 7	E9	E	XII	℞ ¾ × 12 × 1'-11
A 8	E9	E	XII	℞ ¾ × 12 × 3'-10
A 9	E3	E	XII	SST ℞ ¾ × 12 × 2'-6
A 10	E4	E	XII	SST ℞ ¾ × 12 × 2'-6
A 11	E4	E	XII	SST ℞ ¾ × 12 × 2'-6
A 12	E5	E	XII	SST ℞ ¾ × 12 × 2'-6
A 13	E5	E	XII	SST ℞ ¾ × 12 × 2'-6
A 14	E6	E	XII	SST ℞ ¾ × 12 × 2'-6
A 15	E7	E	XII	SST ℞ ¾ × 12 × 2'-6
A 16	E7	E	XII	SST ℞ ¾ × 12 × 2'-6
A 17	E8	E	XII	SST ℞ ¾ × 12 × 2'-6
A 18	B2	C	II	L = 2'-0
A 19	B3	C	II	L = 2'-0
A 20	B8	C	II	L = 2'-0
A 21	B9	C	II	L = 2'-0
A 22	C3	C	I	—
A 23	C8	C	I	—
A 24	C2	C	II	L = 1'-6
A 25	C3	C	II	L = 1'-6
A 26	C8	C	II	L = 1'-6
A 27	C9	C	II	L = 1'-6
A 28	D11	C	II	L = 1'-6
A 29	E2	C	II	L = 1'-3
A 30	E3	C	IV	—
A 31	E8	C	IV	—
A 32	E10	C	II	L = 1'-3
A 33	E11	C	II	L = 1'-3
A 34	C3	C	II	L = 1'-6
A 35	C8	C	II	L = 1'-6
A 36	D3	C	II	L = 5'-0
A 37	D8	C	II	L = 5'-0

NOTES:

1- FOR GENERAL NOTES SEE DWG 905-D-122
2- FOR REF DWGS SEE DWG-905-D-122 & 142
3- FOR EMB ℞S DETAILS SEE 905-D-139
4- FOR SHIELDED PIPE PENET'S DET'S AND SLEEVE DET'S SEE 905-D-703
5- FOR ADDITIONAL EMBEDS FOR CMR LINER SUPPORT SEE DWG. 905 D-134
6- EMBEDS FOR CRANE RAIL SUPPORT TO MEET TOLERANCES GIVEN IN NOTE-6 ON DWG 905-D-152.

LEGEND:

C - DENOTES CIVIL
E - DENOTES ELECTRICAL
H - DENOTES HVAC
I - DENOTES INSTRUMENTATION
M - DENOTES MECHANICAL
S - DENOTES PENETRATION WITH SHIELDING PLATE
T - DENOTES AREA RESERVED FOR TEMPORARY BLOCK OUTS FOR EMBEDED PIPES & CONDUITS.
NS - NEAR SIDE
FS - FAR SIDE

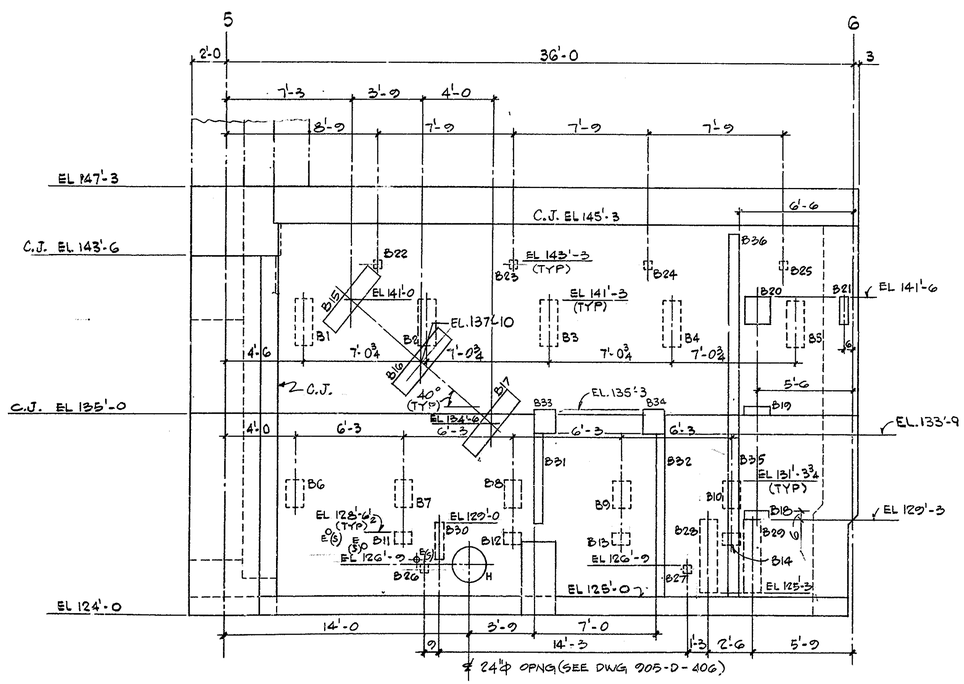

ELEVATION B-B (K11)

FOR ELEC PENETRATIONS SEE DWG 905-D-244

EMBEDDED ℞'S SCHEDULE FOR ELEV B-B				
MARK	LOC.	DISC.	TYPE	REMARKS
B 1	I3	C	II	L = 2'-6
B 2	I4	C	II	L = 2'-6
B 3	I5	C	II	L = 2'-6
B 4	I6	C	II	L = 2'-6
B 5	I7	C	II	L = 2'-6
B 6	J3	C	II	L = 1'-6
B 7	J4	C	II	L = 1'-6
B 8	J4	C	II	L = 1'-6
B 9	J5	C	II	L = 1'-6
B 10	J6	C	II	L = 1'-6
B 11	J4	M	V	℞ ¾ × 8 × 1'-0
B 12	J4	M	V	℞ ¾ × 8 × 1'-0
B 13	J5	M	V	℞ ¾ × 8 × 1'-0
B 14	J6	M	V	℞ ¾ × 8 × 1'-0
B 15	I3	H	XII	L = 4'-0
B 16	I4	H	XII	L = 4'-0
B 17	J4	H	XII	L = 4'-0
B 18	J6	H	VI	℞ ¾ × 6 × 1'-6
B 19	I6	H	VI	℞ ¾ × 6 × 1'-6
B 20	I6	H	VII	—
B 21	I7	H	VI	℞ ¾ × 6 × 1'-6
B 22	I4	E	III	℞ ¾ × 6 × 0'-6
B 23	I4	E	III	℞ ¾ × 6 × 0'-6
B 24	I5	E	III	℞ ¾ × 6 × 0'-6
B 25	I6	E	III	℞ ¾ × 6 × 0'-6
B 26	K4	E	III	SST ℞ ¾ × 6 × 0'-6
B 27	K6	E	III	SST ℞ ¾ × 6 × 0'-6
B 28	K6	E	II	L = 4'-0
B 29	K6	E	II	L = 4'-0
B 30	J4	I	VI	℞ ¾ × 6 × 2'-0
B 31	J5	C	VI	℞ ¾ × 6 × 4'-9
B 32	J6	C	VI	℞ ¾ × 6 × 8'-9
B 33	I5	C	VIII	—
B 34	I6	C	VIII	—
B 35	J6	C	VI	℞ ¾ × 8 × 10'-0
B 36	I6	C	VI	℞ ¾ × 8 × 10'-0

WVNS APPROVAL
COG. MGR.
COG. ENGR.
DRFT. SUPR.
Q.A. MGR.
R&S MGR.
PROJ. MGR.

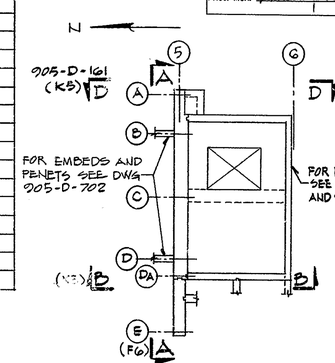

KEY PLAN

WORK THIS DRAWING WITH DWG. 905-D-161

FOR DRAWING INDEX SEE DRAWING NO. _____

APPRVD WVNS CO.		EBASCO SERVICES INCORPORATED A/E O.F.S. NO. 2388 TASK ORDER 009
PROJECT MGR M.J. Wenner	6/12/87	FOR WEST VALLEY NUCLEAR SERVICES COMPANY, INC WEST VALLEY, NEW YORK
ENGINEER SUPV	6/12/87	
LEAD DISC. ENGR	6/12/87	WEST VALLEY DEMONSTRATION PROJECT
DESIGN R. PARASHURAMA	6-12-87	VITRIFICATION FACILITY
CHECKED M. HRACOLSKA	6/12/87	WALL PENETRATIONS - SH 1
DRAWN V. SEKERKA	DATE 6/12/87	FROM EL 124'-0 TO EL 147'-3
DE-AC07-81NE44139 PROJECT NO.		SIZE D; INDEX CODE NUMBER: AREA, DR. TYP, CL, ORIG; DRAWING NO. 905-D-160; REV. 10
19-CWV-02275 SUBCONTRACT NO.		
ISSUED FOR CONSTRUCTION		SCALE ¼"=1'-0; SPEC. CODES; A/E SHEET NO. 905-D-160 B