VERIFY ALL DOCUMENTS FOR CURRENT REVISION AND PENDING CHANGES PRIOR TO EACH USE.
INIT_____ DATE_____

905-D-153

REV NO	DATE	REVISION	DR	CH	APPROVED
B	~~5/27/87~~	~~GENERAL REVISION AS PER ERAT 0726~~	DB	MH	MDW
C	~~5/16/88~~	~~GENERAL REVISION~~	DB	MH	MDW
0	5-31-88	ER 1376		M	
1	7-5-88	REV. PER ECN #2509	DRS	M	VAD
2	3-28-90	REV. PER ECN VF-1-083 VF-1-099	GW	KMR	EM
3	6-18-90	REV. PER ECN VF1-194	BJR	SJK	EM
4	11-6-91	REV PER ECN 4555	PD	DRS	EM

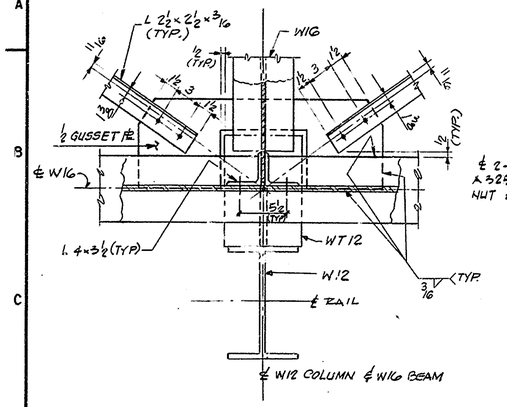

DETAIL 1 ~ AS SHOWN (905-D-152, C3)
DETAIL 1A ~ OPPOSITE HAND (905-D-152, H3)

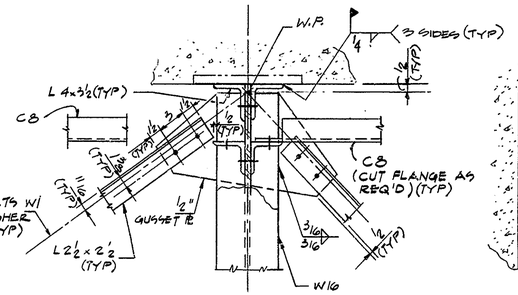

DETAIL 2 ~ AS SHOWN (905-D-152, B4)
DETAIL 2A ~ OPPOSITE HAND (905-D-152, H4)

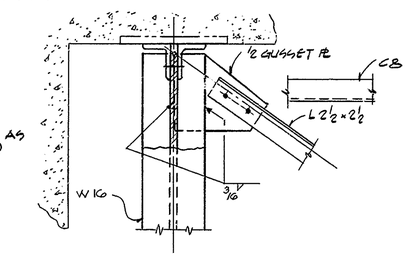

DETAIL 3 ~ AS SHOWN (905-D-152, B2)
DETAIL 3A ~ OPPOSITE HAND (905-D-152, H2)

INFORMATION NOT SHOWN SAME AS DETAIL 2 & 2A (C5)

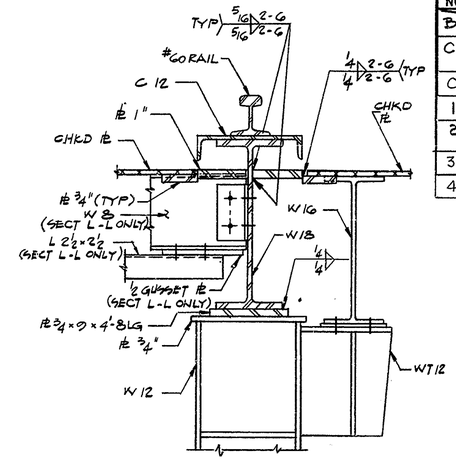

SECTION L-L ~ AS SHOWN (905-D-152, C6)
SECTION L'-L' ~ AS NOTED, SIMILR (905-D-152, G6)
INFO NOT SHOWN SAME AS SECT A-A (905-D-152 (D10)

NOTES:
1. FOR GENERAL NOTES SEE DWG 905-D-122
2. FOR REFERENCE DWG SEE DWG 905-D-122 & 142
3. FOR BRACING CONNECTIONS NOT SHOWN USE SIMILAR DETAILS.

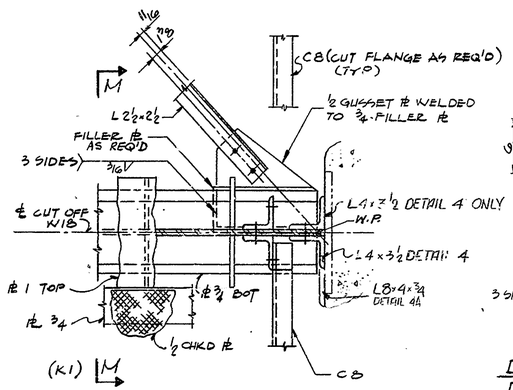

DETAIL 4 ~ AS SHOWN (905-D-152, C7)
DETAIL 4A ~ OPPOSITE HAND; SIMILAR (905-D-152, H7)
INFORMATION NOT SHOWN SAME AS 2 & 2A
REMOVABLE CRANE RAIL NOT SHOWN

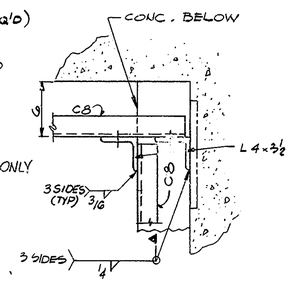

DETAIL 5 ~ AS SHOWN (905-D-152, B7)
DETAIL 5A ~ OPPOSITE HAND (905-D-152, H7)

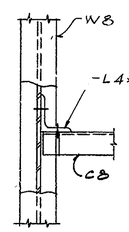

DETAIL 6 ~ (905-D-152, C-5)

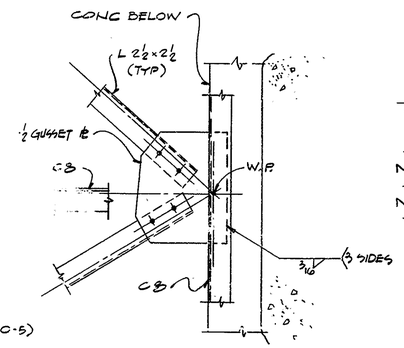

DETAIL 7 ~ (905-D-152, C7)
INFORMATION NOT SHOWN SAME AS 5 (G4) & 2 (C5)

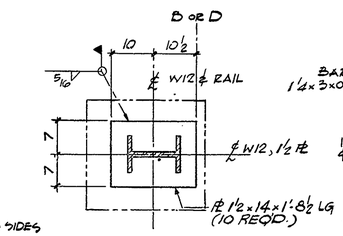

SECTION K-K (905-D-152, D10)
¾" = 1'-0

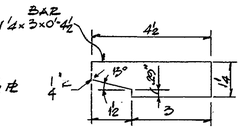

RAIL HOLD DOWN BAR
NTS

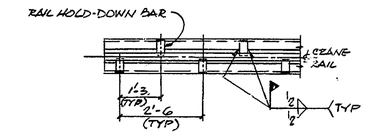

RAIL HOLD-DOWN BAR LOCATION
(TYP FOR ALL CRANE RAIL)

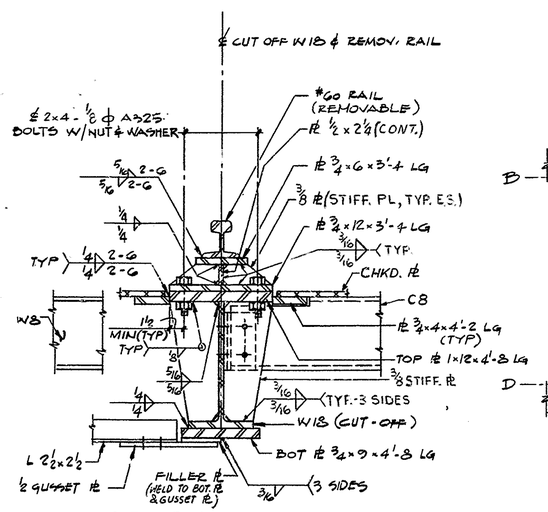

SECT M-M (G1)

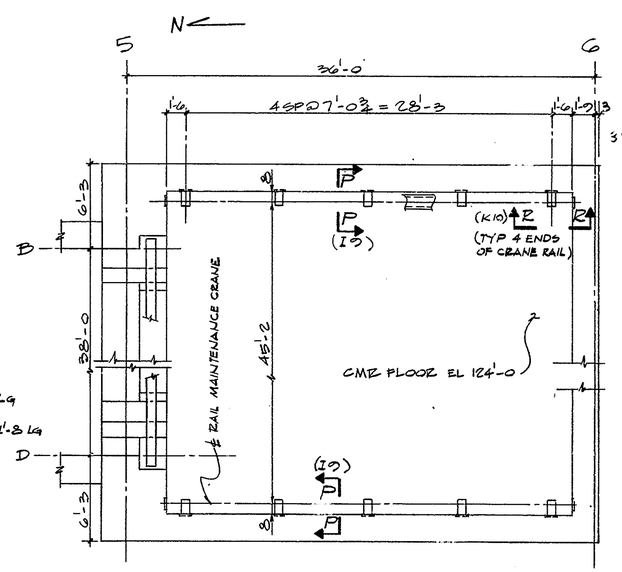

MAINTENANCE CRANE SUPPORT ARRANGEMENT
KEY PLAN
3/16" = 1'-0

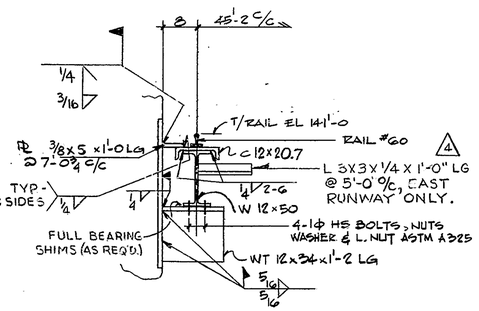

SECTION P-P (I6, K6)
¾" = 1'-0

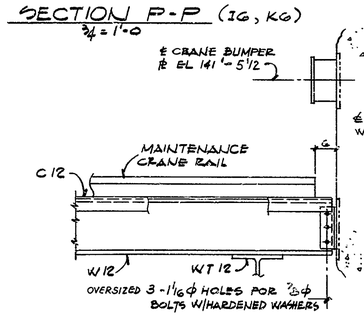

SECTION R-R (I7)
INFO NOT SHOWN SAME AS SECT C-C DWG 905-D-152 (H10)

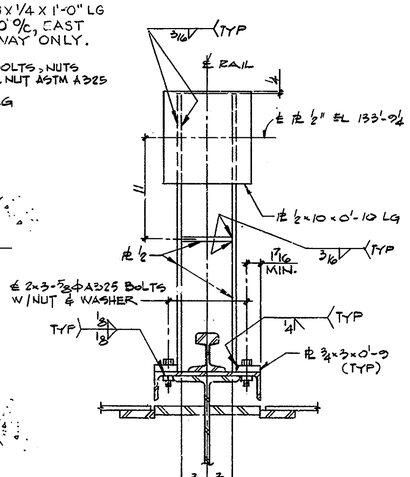

SECTION N-N (905-D-152, E10 & H8)
INFO NOT SHOWN SAME AS SECT L-L (D12)

WVNS APPROVAL	
COG. MGR.	
COG. ENGR.	
DRFT. SUPR.	
Q.A. MGR.	
R&S MGR.	
PROJ. MGR.	

WORK THIS DWG WITH DWG 905-D-152
FOR DRAWING INDEX SEE DRAWING NO.

APPRVD WNS CO.		EBASCO SERVICES INCORPORATED A/E O.F.S. NO. 2388 TASK ORDER 009
PROJECT MGR M.J. Nebecker	2/13/87	FOR WEST VALLEY NUCLEAR SERVICES COMPANY, INC WEST VALLEY, NEW YORK
ENGINEER SUPV	2/13/87	WEST VALLEY DEMONSTRATION PROJECT
LEAD DISC. ENGR	2/13/87	VITRIFICATION FACILITY
DESIGN R. Paras	2-13-87	MISCELLANEOUS STEEL
CHECKED M. HRABOWSKI	2/13/87	CMR PLATF & CRANE SUPT DETAILS SH 2
DRAWN ILOWITE	DATE 2/13/87	
DE-AC07-81NE44139 PROJECT NO.		SIZE D; INDEX CODE NUMBER: AREA / DR. TYP / CL / ORIG; DRAWING NO. 905D-153; REV. 4
19-CWV-02375 SUBCONTRACT NO.		
ISSUED FOR CONSTRUCTION		SCALE: 1/2"=1'-0" UNL; SPEC. CODES; A/E SHEET NO. 905-D-153 C