REV NO	DATE	REVISION	DR	CH	APPROVED
B	4-21-87	GENERAL REVISION AS PER EBAR #927	DB	SC	
C	5-16-88	GENERAL REVISION	VS	SC	
0	5-31-88	ER 1376	L RK	M	
1	7-1-88	REVISED PER ECN 2509		M	

905-D-150

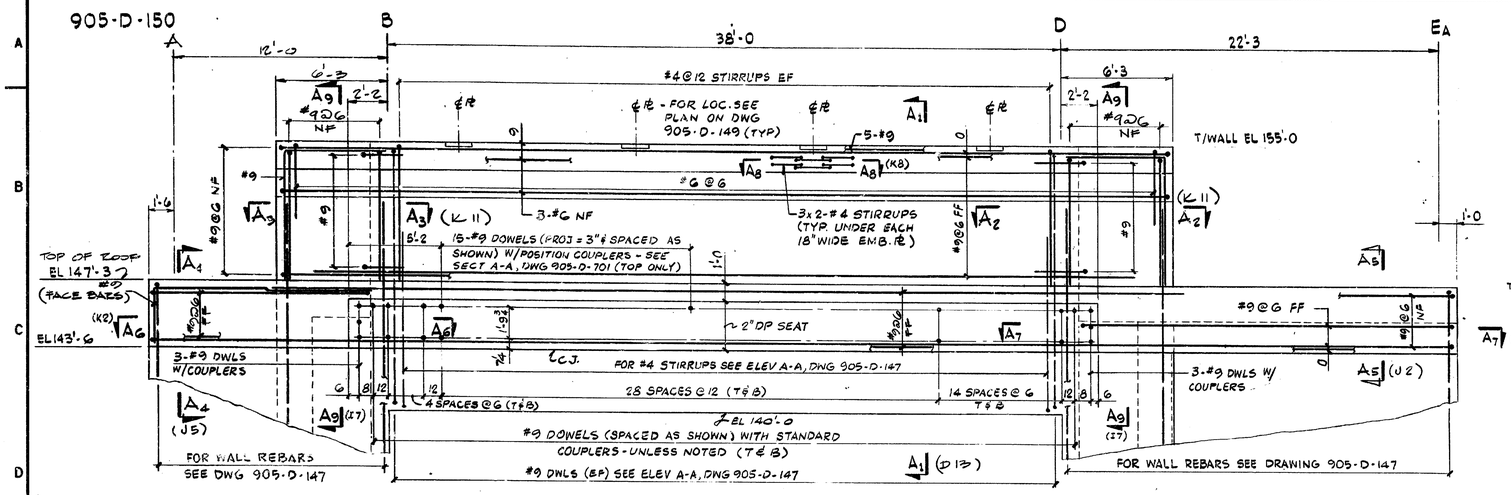

ELEVATION A-A (D-149/I2)

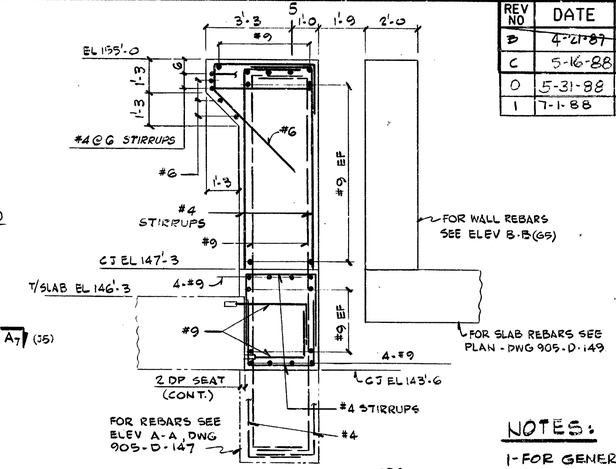

SECTION A_1-A_1 (DG 905-D-149/D1)
3/8" = 1'-0

NOTES:

1- FOR GENERAL NOTES SEE DWG. 905-D-122
2- FOR REFERENCE DWGS. SEE DWG. 905-D-122 & 142

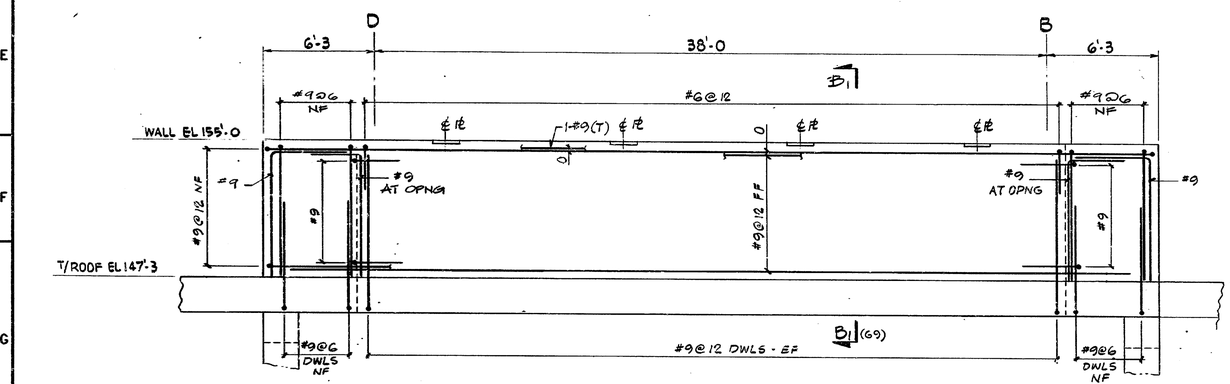

ELEVATION B-B (D-149/B3)

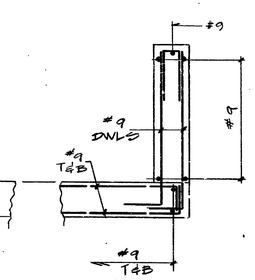

SECT B_1-B_1 (G6)

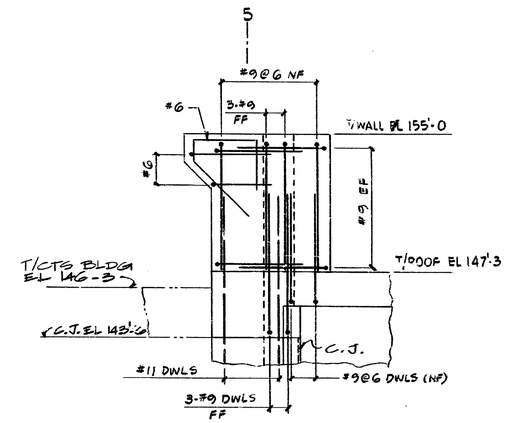

ELEVATION C-C (D-149/B3) (OPP HAND)
ELEVATION D-D (D-149/G3) (AS SHOWN)

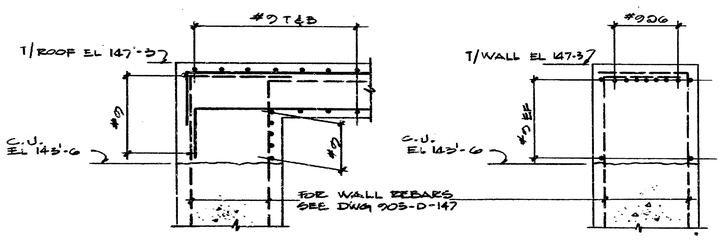

SECT A_5-A_5 (C10)
3/8" = 1'-0

SECT A_4-A_4 (D1)
3/8" = 1'-0

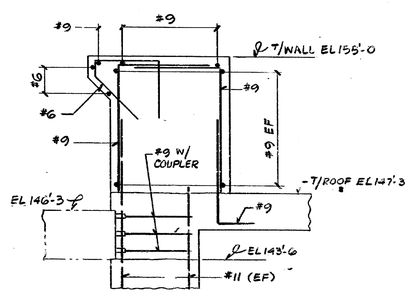

SECT A_9-A_9 (C2, C7)

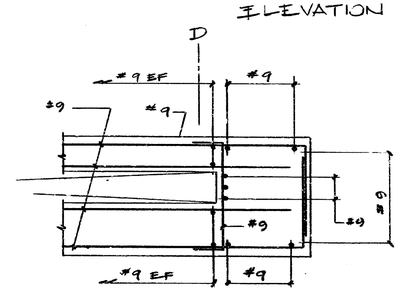

SECT A_2-A_2 (B8) (AS SHOWN)
SECT A_3-A_3 (B3) (OPP HAND)

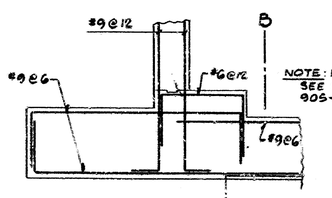

SECT A_6-A_6 (C1)

NOTE: FOR VERTICAL BARS SEE SECT A7-A1 ON DWG 905-D-147

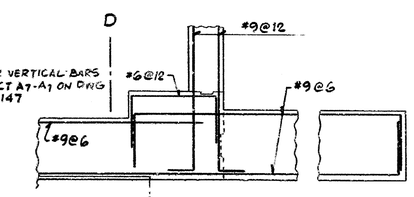

SECT A_7-A_7 (C10)

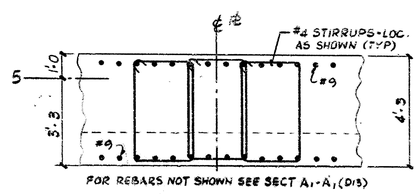

SECT A_8-A_8 (B6)
N.T.S.

REFERENCE DRAWINGS:

WALL ELEVATIONS - M&R, EL 124'-0 TO EL 145'-3 SH 1	905-D-147
ROOF PLAN	905-D-149
PARTIAL ROOF PLAN - NORTH OF COL LINE 5	905-D-701

FOR DRAWING INDEX SEE DRAWING NO. _____

APPRVD WVNS CO.		EBASCO SERVICES INCORPORATED A/E O.F.S. NO. 2388 TASK ORDER 009
PROJECT MGR	2/15/87	FOR WEST VALLEY NUCLEAR SERVICES COMPANY, INC WEST VALLEY, NEW YORK
ENGINEER SUPV	2/10/87	
LEAD DISC ENGR	2/13/87	WEST VALLEY DEMONSTRATION PROJECT VITRIFICATION FACILITY WALL ELEVATIONS M&R ABOVE EL 147'-3
DESIGN R. NAGASHUGAMA	2-13-87	
CHECKED S. GASUSA	2-12-87	
DRAWN D. BUSWICZ	DATE 2-12-87	
PROJECT NO. DE-AC07-81NE44139		SITE / INDEX CODE NUMBER / DR. TYP / CL / ORIG / DRAWING NO. 905D-150 / REV. 1
SUBCONTRACT NO. 19-CWV-02275		
ISSUED FOR CONSTRUCTION		SCALE: 1/4"=1'-0 UN / SPEC. CODES / A/E SHEET NO. 905-D-150 C

WVNS APPROVAL
COG. MGR.
COG. ENGR.
DRFT. SUPR.
Q.A. MGR.
R&S MGR.
PROJ. MGR.