VERIFY ALL DOCUMENTS FOR CURRENT REVISION AND PENDING CHANGES PRIOR TO EACH USE.
INIT_____ DATE_____

REV NO	DATE	REVISION	DR	CH	APPROVED
B	~~4-21-87~~	GENERAL REVISION AS PER EBAR # 927	VS	SC	
C	5-16-86	GENERAL REVISION	VS	SC	
0	5-31-88	E.R. 1376			
1	7-5-88	REV. PER ECN # 2509	DCS		
2	9-9-88	REV. PER ECN 2603	GW		
3	2-28-89	REV'D PER ECN 2735	CTC	Em	
4	9-18-89	REV. PER ECN. 3077	GW	KMR	Em
5	11-29-89	REV. PER ECN 3137	GW	DRS	Em
6	1-5-90	REV. PER ECN 3347	CGR	KMR	Em
7	4-2-90 4-3-90	REV PER FCN VF-1-115 " " " VF-1-131	GM CGR	DRS	Em
8	4-10-90	REV. PER FCN VF-1-116	CGR	DRS	Em
9	6-14-90	REV. PER FCN VF-1-182	GW		Em

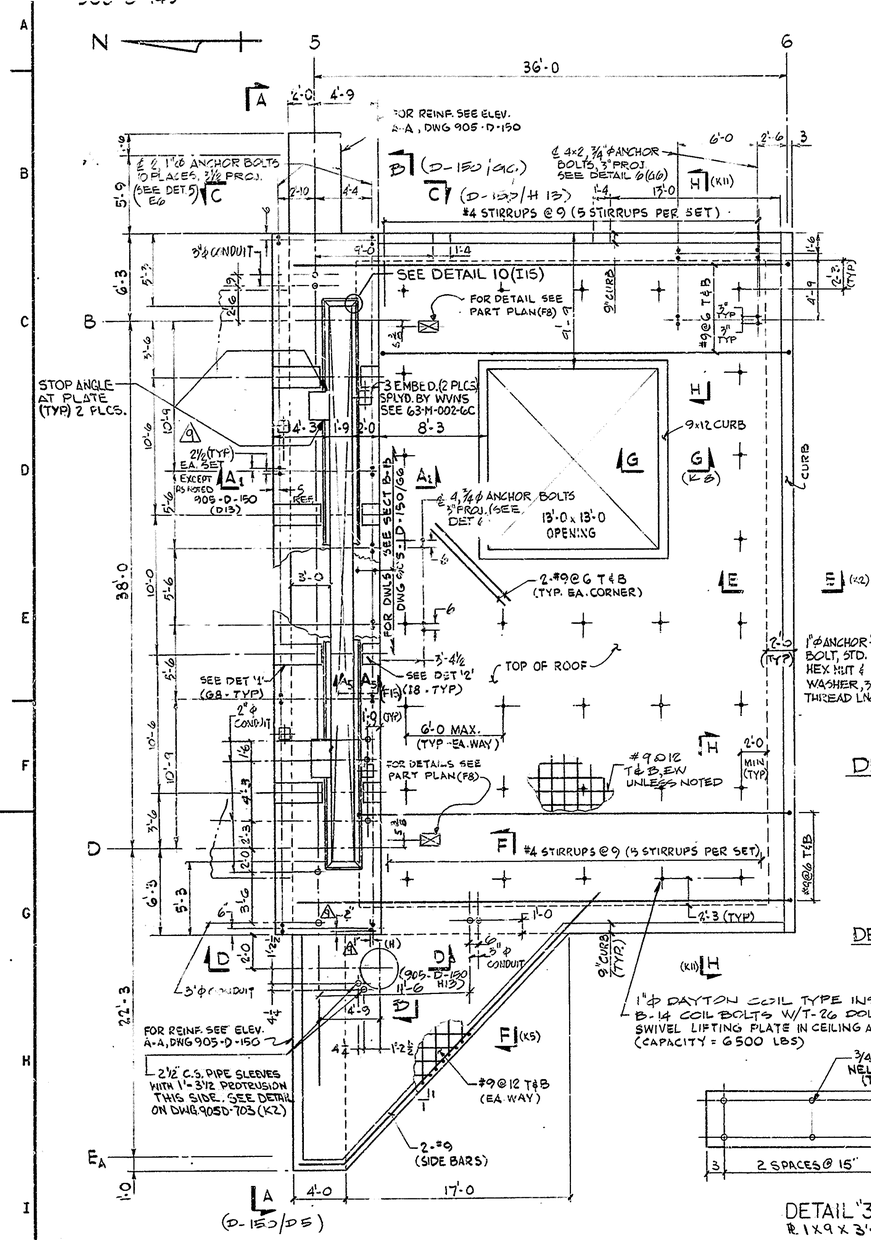

PLAN & WALL LOCATION
3/16" = 1'-0

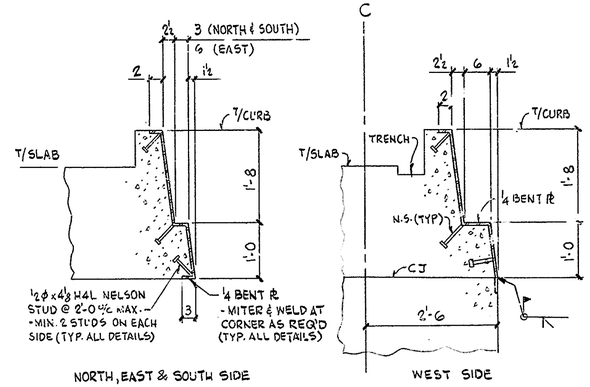

HATCH FRAME DETAIL (D-146/D3)
¾" = 1'-0

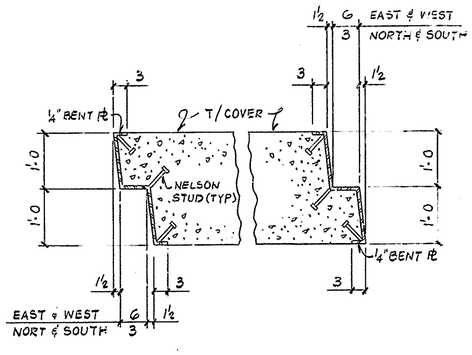

HATCH COVER DETAIL (D-146/A12)
¾" = 1'-0

NOTES:

1-FOR GENERAL NOTES SEE DWG. 905-D-122
2-FOR REFERENCE DWGS. SEE DWG. 905-D-122 & 142
3-FOR ADD'L REBARS AT OPENING SEE DWG 905-D-145.
4-ALLOWABLE LIVE LOAD = 40 PSF.

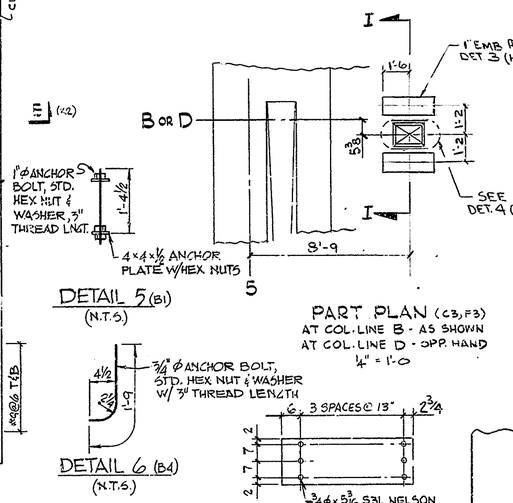

DETAIL 5 (B1)
(N.T.S.)

PART PLAN (C3, F3)
AT COL. LINE B - AS SHOWN
AT COL. LINE D - OPP. HAND
¼" = 1'-0

DETAIL 6 (B4)
(N.T.S.)

DETAIL '1' (E1)
PL 2 x 18 x 3'-11¾ LG - 4 REQ'D
N.T.S.

DETAIL '2' (E3)
PL 2 x 18 x 1'-8¾ LG - 4 REQ'D
N.T.S.

DETAIL '3' (E8)
PL 1 x 9 x 3'-0 - 4 REQ
1" = 1'-0

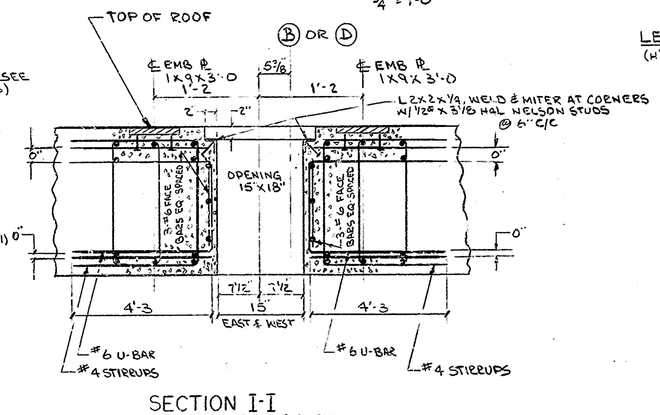

SECTION I-I
AT COL. LINE B-AS SHOWN
AT COL. LINE D-OPP HAND
1" = 1'-0

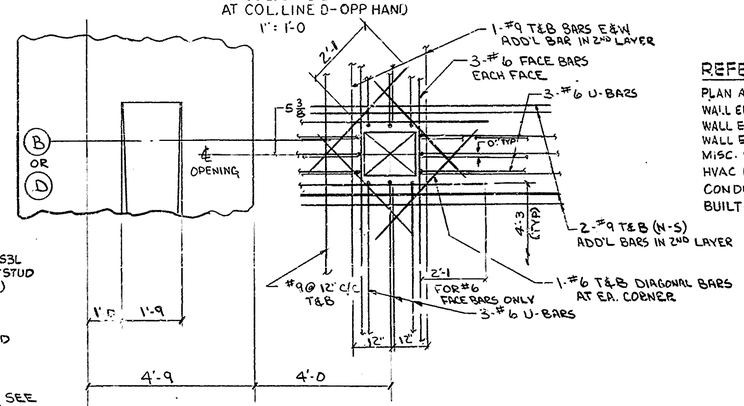

DETAIL "4" (E8)
½" = 1'-0

LEGEND:
(H) - DENOTES HVAC

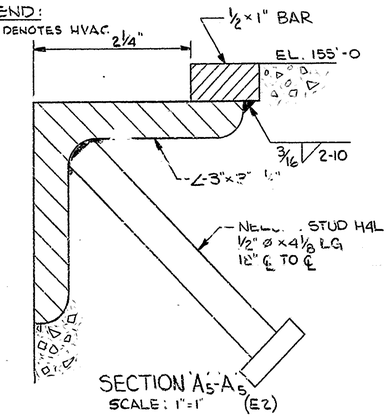

SECTION A5-A5 (E2)
SCALE: 1" = 1'

REFERENCE DRAWINGS:

PLAN AT EL 124'-0	905-D-146
WALL ELEVATIONS M&R, EL 124'-0 TO 145'-3, SH. 1	905-D-147
WALL ELEVATIONS M&R, EL 124'-0 TO 145'-3, SH. 2	905-D-148
WALL ELEVATIONS M&R, ABOVE EL 147'-3	905-D-150
MISC. STEEL - CMR HATCH COVER	905-D-151
HVAC MISC. DETAILS	905-D-407
CONDUIT LAY-OUT V&F PLAN EL 124.00' & ABOVE	905-D-244
BUILT-UP ROOF	905D-193

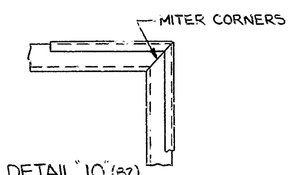

DETAIL "10" (B2)
SCALE: 1½" = 1'-0

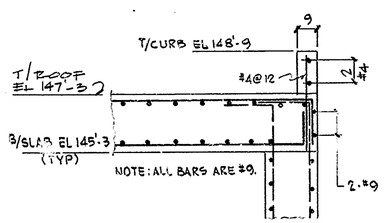

SECTION E-E (E6)

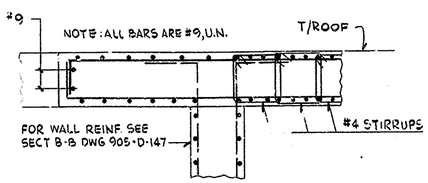

SECTION F-F (H3)

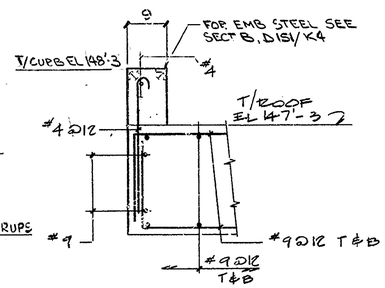

SECTION G-G (D5)
¾" = 1'-0

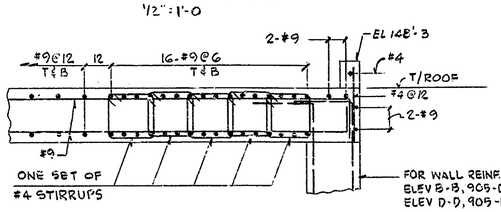

SECTION H-H (B5, G5)

FOR DRAWING INDEX SEE DRAWING NO. _____

WVNS APPROVAL	
COG. MGR.	
COG. ENGR.	
DRFT. SUPR.	
Q.A. MGR.	
R&S MGR.	
PROJ. MGR.	

APPRVD WVNS CO.		EBASCO SERVICES INCORPORATED A/E O.F.S. NO. 2388 TASK ORDER 009 FOR WEST VALLEY NUCLEAR SERVICES COMPANY, INC. WEST VALLEY, NEW YORK
PROJECT MGR	2/13/87	
ENGINEER SUPV	2/13/87	
LEAD DISC. ENGR	2/13/87	WEST VALLEY DEMONSTRATION PROJECT
DESIGN K. TAKASHIGAWA	2-13-87	VITRIFICATION FACILITY
CHECKED S. CAMPBELL	2-13-87	ROOF PLAN
DRAWN D. BLUSUICE	DATE 2-13-87	
DE-AC07-81NE44139 PROJECT NO.		SIZE D; INDEX CODE NUMBER: AREA / DR. TYP / CL / ORIG; DRAWING NO. 905D-149; REV. 9
19-CWV-02275 SUBCONTRACT NO.		
ISSUED FOR CONSTRUCTION		SCALE 3/8" = 1'-0 (U.N.); SPEC. CODES; A/E SHEET NO. 905-D-149 C