VERIFY ALL DOCUMENTS FOR CURRENT REVISION AND PENDING CHANGES PRIOR TO EACH USE.
INIT_____ DATE_____

D-148

REV NO	DATE	REVISION	DR	CH	APPROVED		
3	4-21-87	GENERAL REVISION AS PER SSAR #927	VS	SC	SAW	SAW	MAW
C	5-16-88	GENERAL REVISION	VS	SC	SAW	SAW	MAW
0	5-31-88	ER 1376		M	RK		
1	7-1-88	REV'D PER ECN 2509	DAS	M	VAD		
2	3-28-90	REV. PER PCN. VF-1-093, VF-1-089	GW	KMG	SM		

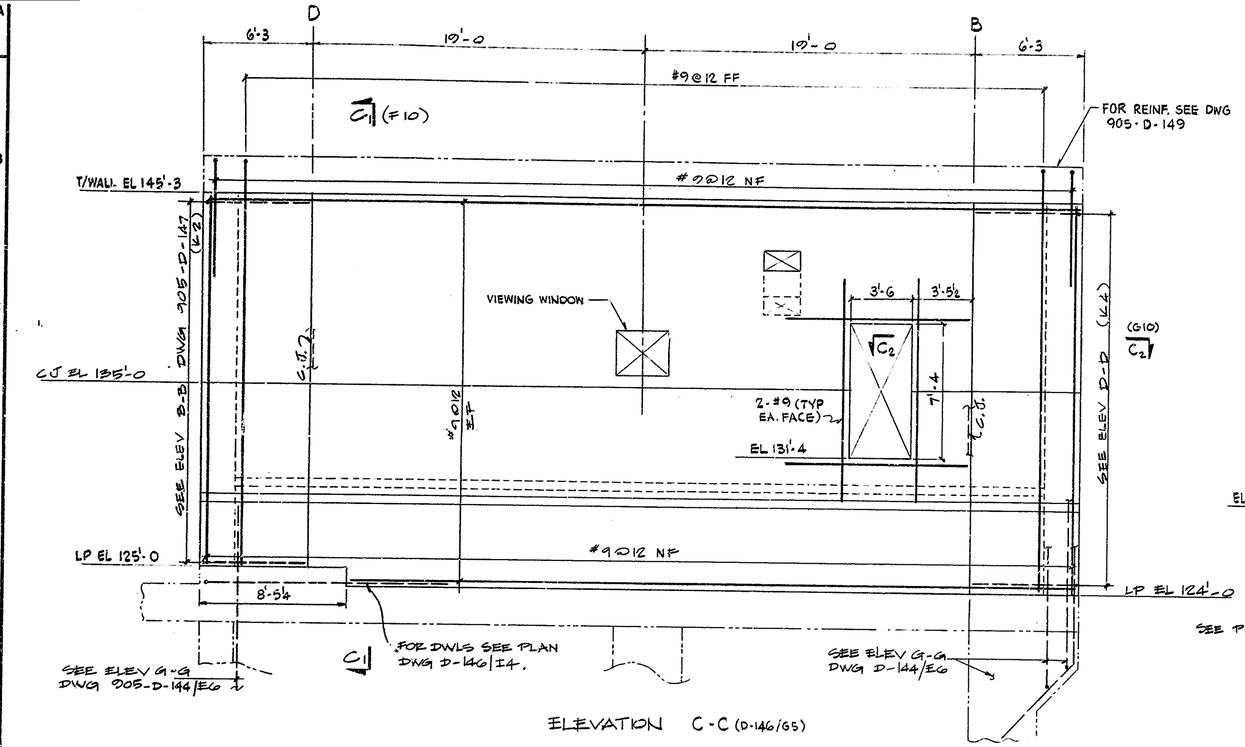

ELEVATION C-C (D-146/G5)

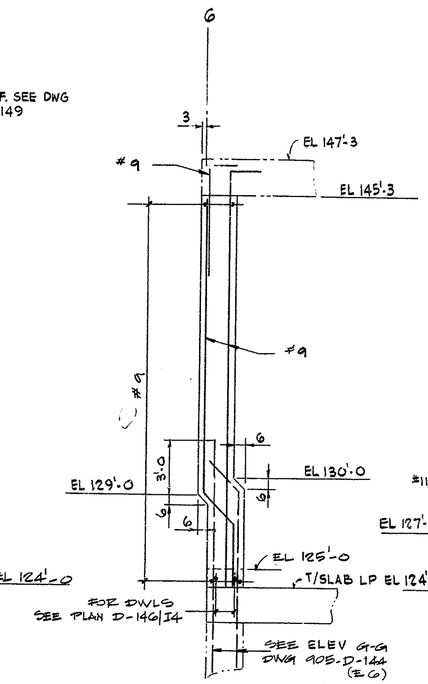

SECT C1-C1 (B3)

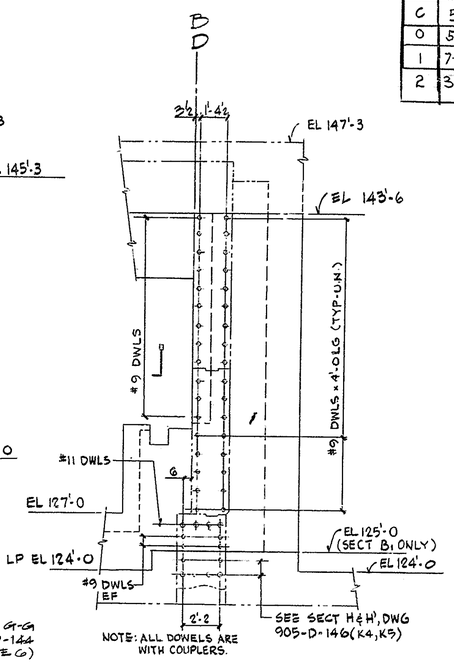

SECT B_1-B_1 (K1/D-147) - AS SHOWN
SECT D_2-D_2 (J6) - OPP. HAND

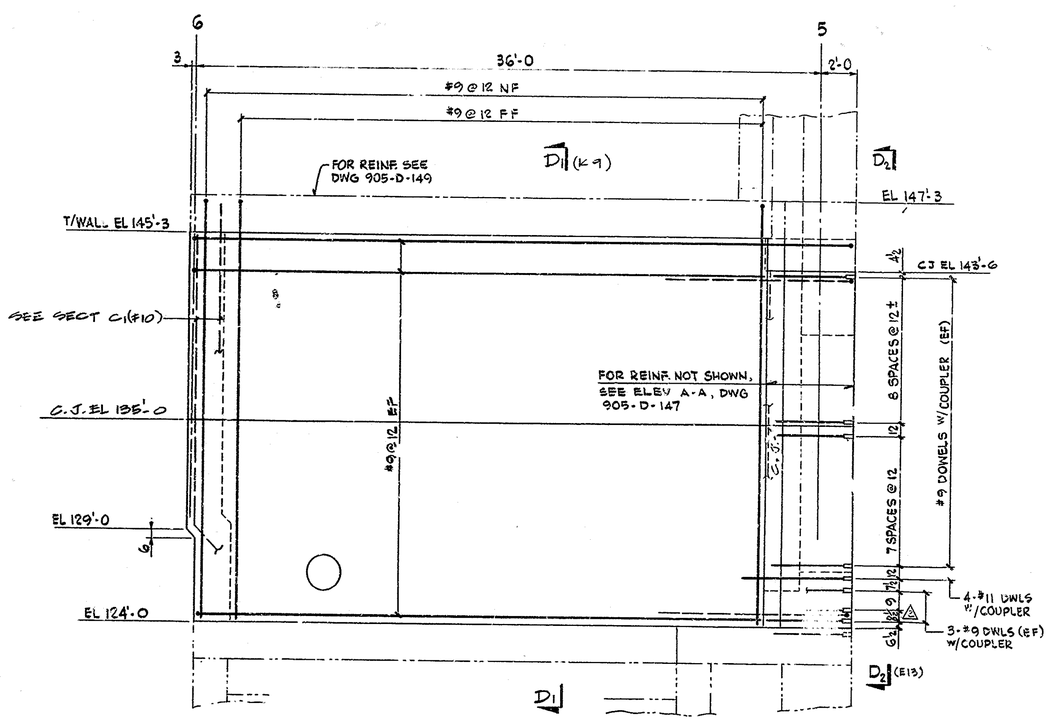

ELEVATION D-D (D-146/B1)

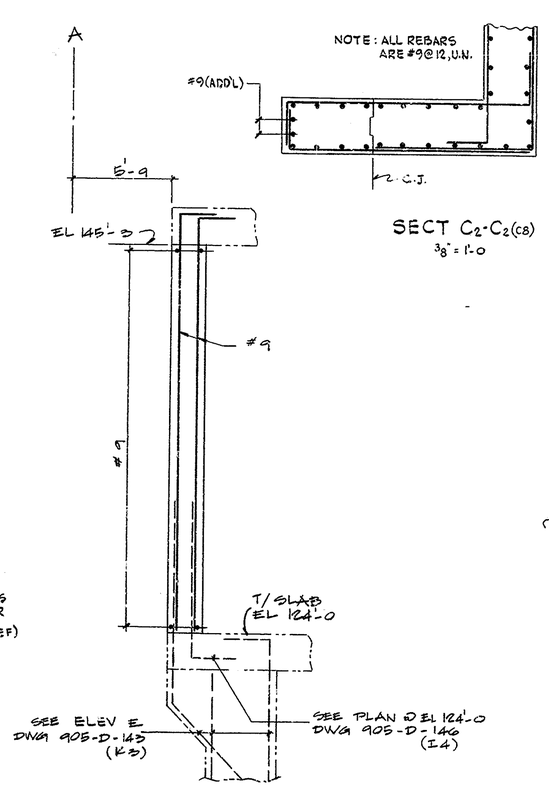

SECT D1-D1 (G4)

SECT C_2-C_2 (C8)
$\frac{3}{8}$" = 1'-0

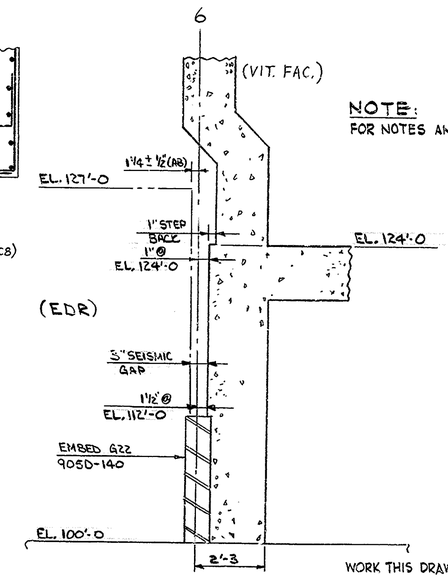

NOTE:
FOR NOTES AND REFERENCE DRAWINGS SEE DWG 905-D-147.

SECTION U-U
905D-122 (C7) & 905D-146 (C5)

WORK THIS DRAWING WITH DWG 905-D-147.

FOR DRAWING INDEX SEE DRAWING NO. _____

WVNS APPROVAL	
COG. MGR.	
COG. ENGR.	
DRFT. SUPR.	
Q.A. MGR.	
RAS MGR.	
PROJ. MGR.	

APPRVD WVNS CO.		EBASCO SERVICES INCORPORATED A/E O.F.S. NO. 2388 TASK ORDER 009
PROJECT MGR	3/31/87	FOR WEST VALLEY NUCLEAR SERVICES COMPANY, INC WEST VALLEY, NEW YORK
ENGINEER SUPV	2/13/87	
LEAD DISC. ENGR	7/13/87	WEST VALLEY DEMONSTRATION PROJECT VITRIFICATION FACILITY WALL ELEVATIONS M&R SH 2 FROM EL 124'-0 TO EL 145'-3
DESIGN R. IKAKA, H. OKAMA	2-13-87	
CHECKED S. CASUBA	2-12-87	
DRAWN D. BUSUIOC	DATE 2-12-87	
DE-AC07-81NE44139 PROJECT NO.		
19-CWV-02275 SUBCONTRACT NO.		
ISSUED FOR CONSTRUCTION		

SIZE	INDEX CODE NUMBER: AREA	DR. TYP	CL	ORIG	DRAWING NO.	REV.
D					905D-148	2

SCALE 1/4" = 1'-0 U.N. | SPEC. CODES | A/E SHEET NO. 905-D-148 C