VERIFY ALL DOCUMENTS FOR CURRENT REVISION AND PENDING CHANGES PRIOR TO EACH USE.
INIT_____ DATE_____

905-D-146

REV NO	DATE	REVISION	DR	CH	APPROVED
B	4-21-87	GENERAL REVISION AS PER ECN #0-7	VS	SC	
C	5-16-88	GENERAL REVISION	VS	SC	
0	5-31-88	ER 1376		M	
1	7-1-88	REV'D PER ECN 2509	DAS	M	VAD
2	3-28-90	REV. PER ECN VF-1-093 VF-1-065, VF-1-075	GW	KMQ	
3	6-5-95	ECN 8991	GW	DRS	—

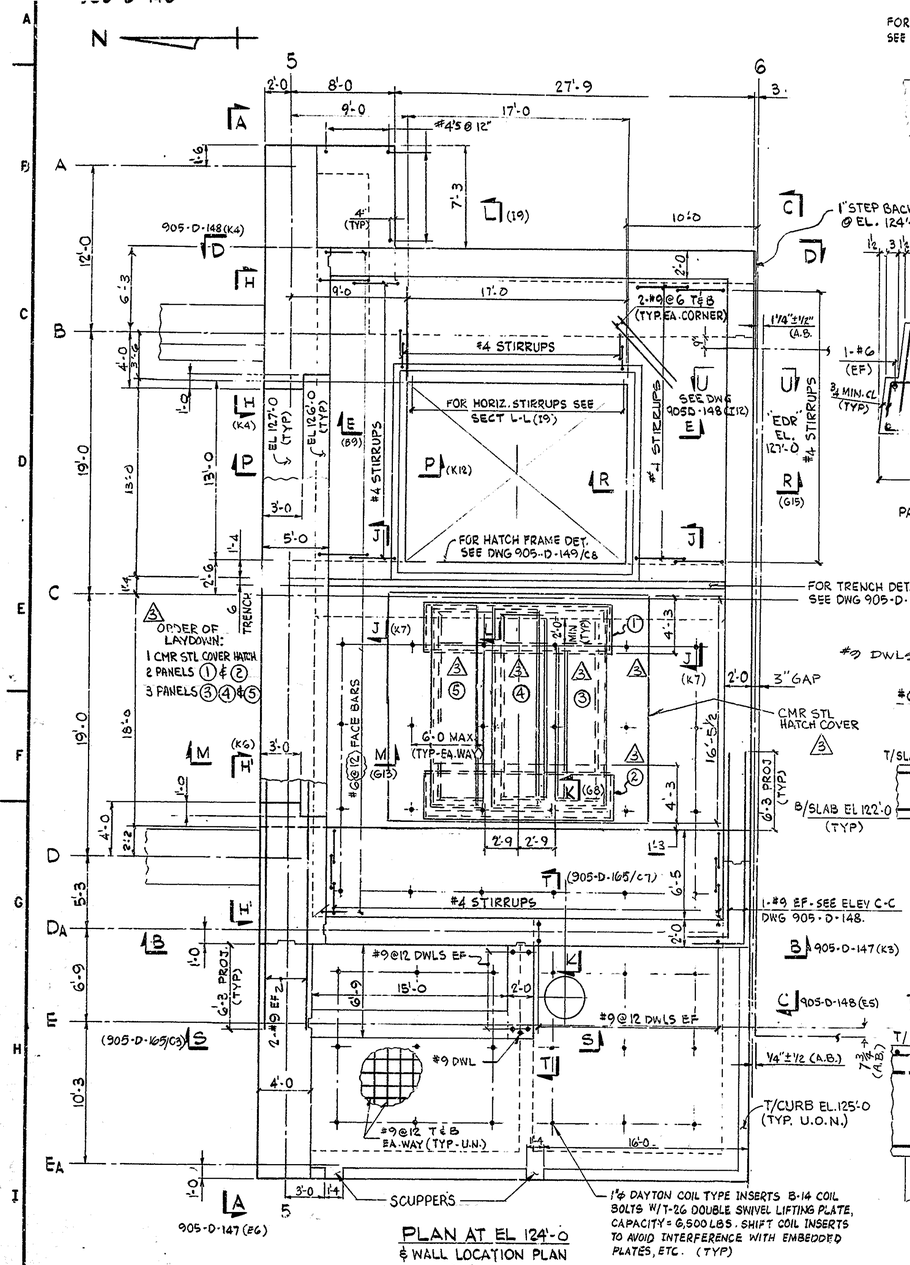

PLAN AT EL 124'-0
℄ WALL LOCATION PLAN
3/16" = 1'-0

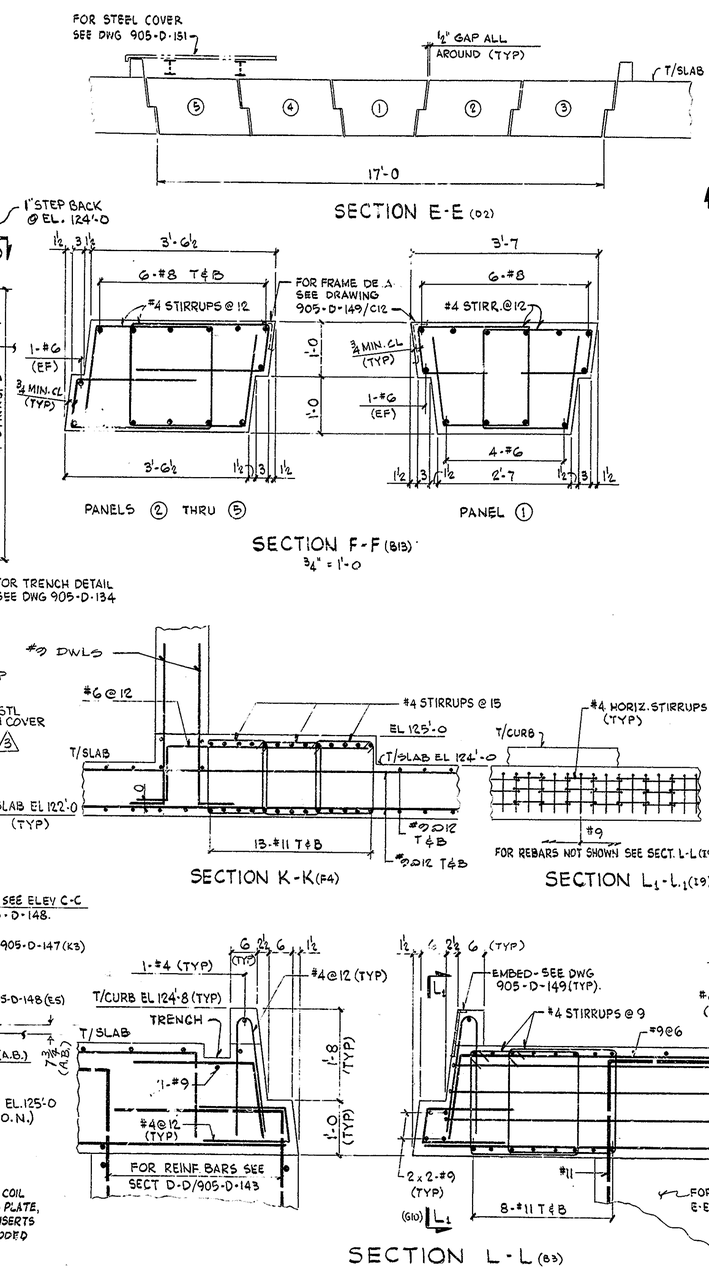

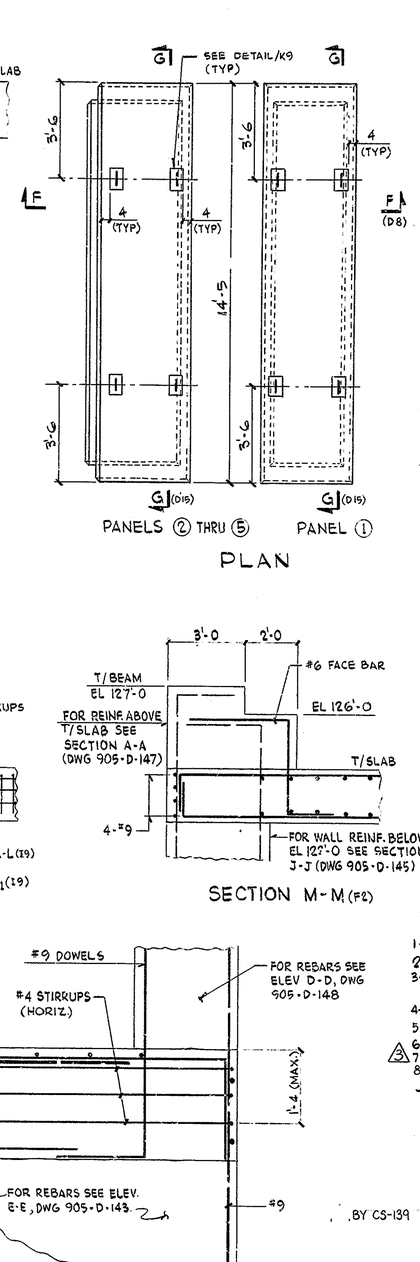

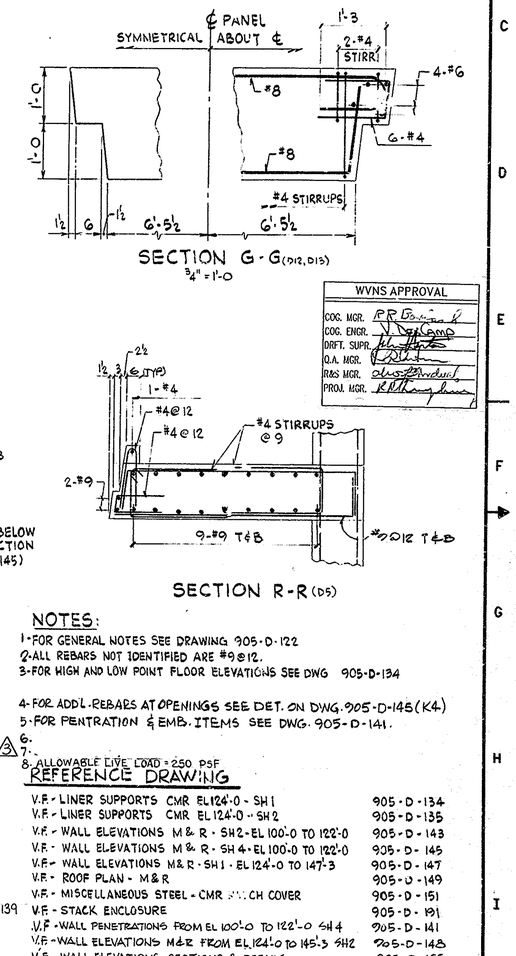

WVNS APPROVAL	
COG. MGR.	
COG. ENGR.	
DRFT. SUPR.	
Q.A. MGR.	
R&S MGR.	
PROJ. MGR.	

NOTES:
1. FOR GENERAL NOTES SEE DRAWING 905-D-122
2. ALL REBARS NOT IDENTIFIED ARE #9 @ 12.
3. FOR HIGH AND LOW POINT FLOOR ELEVATIONS SEE DWG 905-D-134
4. FOR ADD'L REBARS AT OPENINGS SEE DET. ON DWG. 905-D-145 (K4)
5. FOR PENTRATION & EMB. ITEMS SEE DWG. 905-D-141.
6.
7.
8. ALLOWABLE LIVE LOAD = 250 PSF

REFERENCE DRAWING

V.F. - LINER SUPPORTS CMR EL 124'-0 - SH 1	905-D-134
V.F. - LINER SUPPORTS CMR EL 124'-0 - SH 2	905-D-135
V.F. - WALL ELEVATIONS M & R - SH 2 - EL 100'-0 TO 122'-0	905-D-143
V.F. - WALL ELEVATIONS M & R - SH 4 - EL 100'-0 TO 122'-0	905-D-145
V.F. - WALL ELEVATIONS M & R - SH 1 - EL 124'-0 TO 147'-3	905-D-147
V.F. - ROOF PLAN - M & R	905-D-149
V.F. - MISCELLANEOUS STEEL - CMR HATCH COVER	905-D-151
V.F. - STACK ENCLOSURE	905-D-191
V.F. - WALL PENETRATIONS FROM EL 100'-0 TO 122'-0 SH 4	905-D-141
V.F. - WALL ELEVATIONS M&R FROM EL 124'-0 TO 145'-3 SH 2	905-D-148
V.F. - WALL ELEVATIONS, SECTIONS & DETAILS	905-D-165
FOR ADD'L REFERENCE DRAWINGS SEE DWGS 905-D-122 & 142	
V.F. — BUILT-UP ROOF	905-D-193

BY CS-139

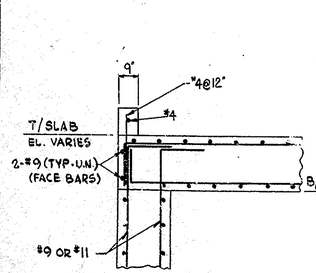

EDGE OF SLAB DETAIL
(TYPICAL U.O.N.)

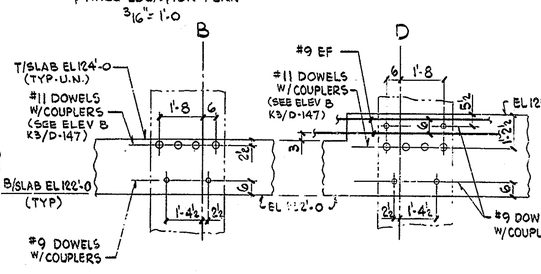

SECTION H-H (C1)

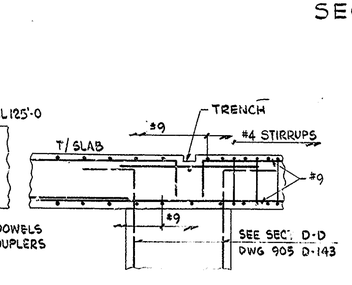

SECTION H'-H' (F1)

SECTION J-J (E2, E5)

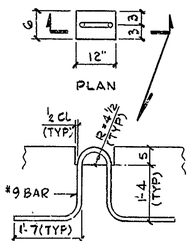

SECTION
LIFTING HOOK DETAIL (A12)
3/4" = 1'-0

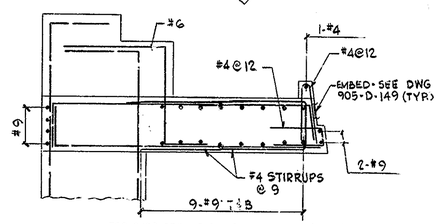

- FOR CURB DETAILS SEE SECT L-L (19) & R-R (G15)
- FOR INFORMATION NOT SHOWN SEE SECT M-M (G13)

SECTION P-P (D3)

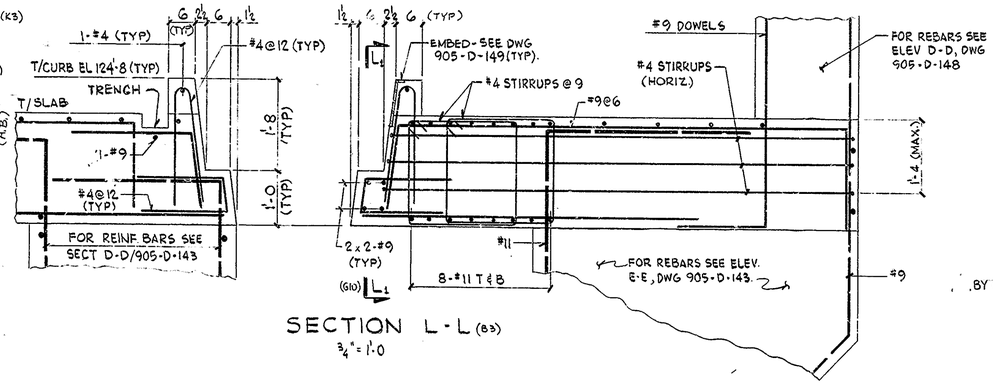

FOR DRAWING INDEX SEE DRAWING NO. _____

APPRVD WVNS CO.		EBASCO SERVICES INCORPORATED
PROJECT MGR	2/13/87	A/E O.F.S. NO. 2388 TASK ORDER 009
ENGINEER SUPV	2/13/87	FOR WEST VALLEY NUCLEAR SERVICES COMPANY, INC WEST VALLEY, NEW YORK
LEAD DISC ENGR	2/13/87	WEST VALLEY DEMONSTRATION PROJECT
DESIGN R. TARASHUCHAN	2-12-87	VITRIFICATION FACILITY
CHECKED S. SASUSA	2.12.87	PLAN AT EL. 124'-0
DRAWN V. SEKERKA	DATE 2-12-87	

DE-AC07-81NE44139 PROJECT NO.	SIZE	INDEX CODE NUMBER			DRAWING NO.	REV.
13-CWV-02275 SUBCONTRACT NO.	D	AREA	OR. TYP	CL	ORIG	905D-146	3
ISSUED FOR CONSTRUCTION	SCALE 3/16" = 1'-0 (U.N.)	SPEC. CODES			A/E SHEET NO. 905-D-146 C	