VERIFY ALL DOCUMENTS FOR CURRENT REVISION AND PENDING CHANGES PRIOR TO EACH USE.
INIT_____ DATE_____

5-D-145

REV NO	DATE	REVISION	DR	CH	APPROVED
B	~~4-27-87~~	GENERAL REVISION ~~AS PER EBAR #927~~	VS	SC	~~DWN~~ ~~DWN~~ ~~MDV~~
C	5-16-88	GENERAL REVISION	VS	SC	~~DWN~~ ~~DWN~~ ~~MDV~~
0	5-31-88	ER 1376		M	
1	7-1-88	REV. PER ECN #2509	DRS	M	
2	10/30/90	REV PER ECN 3966	LRK	HAB	
3	11-2-90	PER: FCN VF-1-251	JLH	HAB	
4	7-10-91	REV. PER ECN 4261	W	HAB	

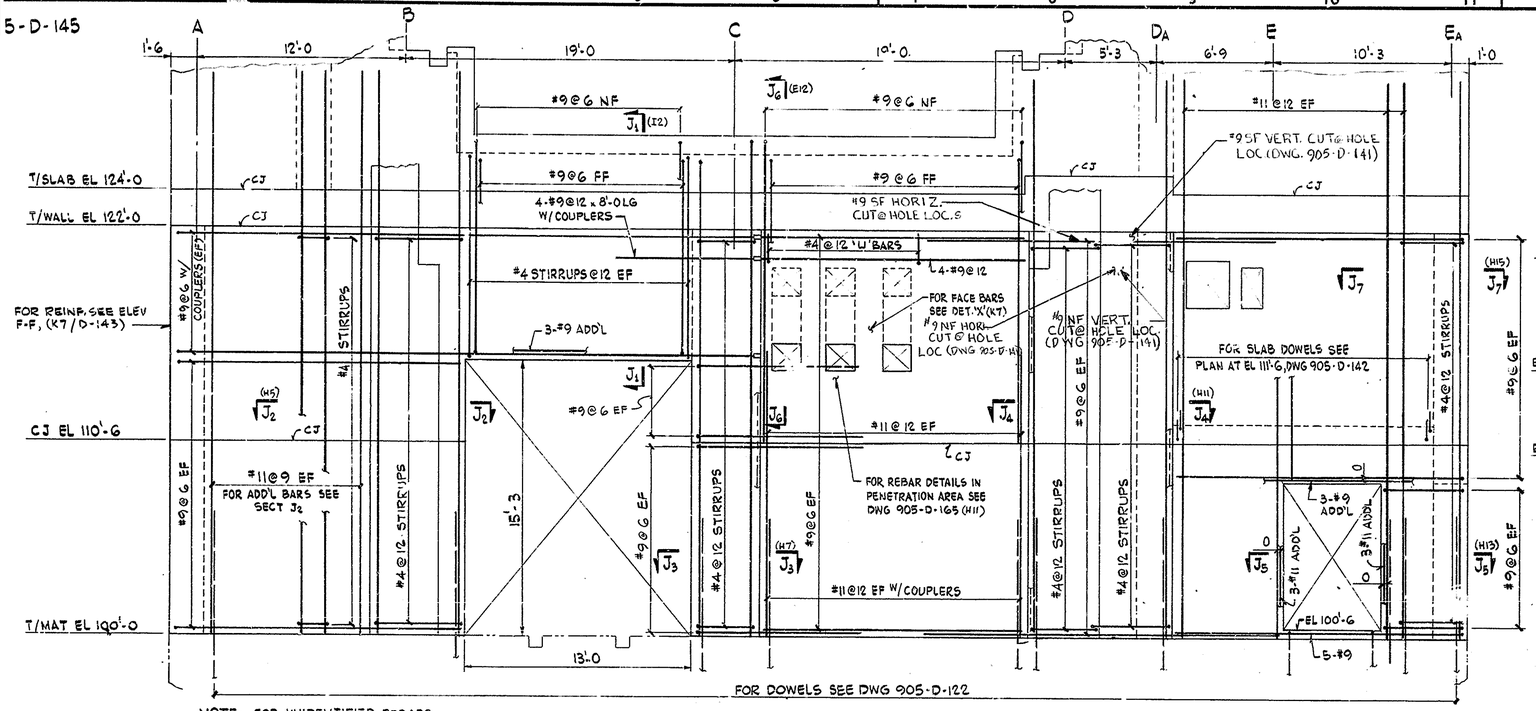

NOTE: FOR UNIDENTIFIED REBARS SEE CORRESPONDING SECTIONS.

ELEVATION J-J (G2/D-142)
1/4" = 1'-0

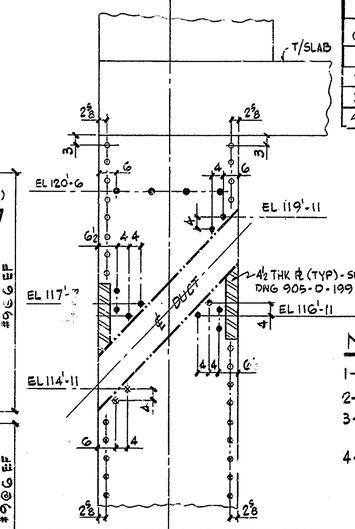

NOTES: - ALL LENTONS ARE STANDARD COUPLERS - A2 FOR #9 REBARS.
- VERT. SPACING OF COUPLERS IS 6" O.C., U.N.

LEGEND: O - DENOTES COUPLER W/REGULAR WALL REBAR
● - DENOTES COUPLER W/8'-0 LONG ANCHOR
⊗ - DENOTES DOWELS

THIS DRAWING IS PART OF CS-134 EXCEPT AS NOTED: CS-139 - ZONE H5, H10 AND RELATED DETAILS

NOTES:

1- FOR GENERAL NOTES SEE DWG. 905-D-122
2- FOR REFERENCE DWGS. SEE DWG. 905-D-122 & 142
3- FOR ADDITIONAL PENETRATIONS AND/OR PENETRATION DIMENSIONS SEE DWG 905-D-141.
4- FOR ADDITIONAL BARS AT OPENING SEE DETAIL (K4, K10)

SECTION J6-J6 (A6)
1/2" = 1'-0

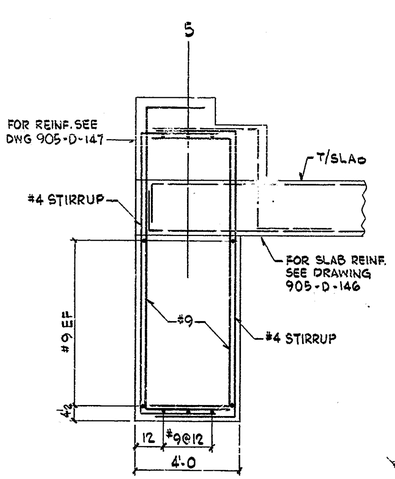

SECTION J1-J1 (A5)

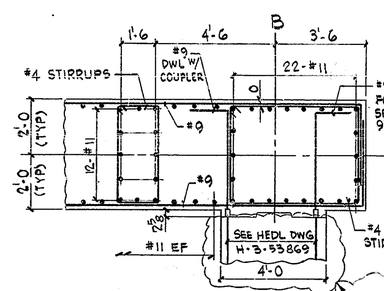

SECTION J2-J2 (C2)

SUPPLIED BY WVNS INSTALLED BY CS-139

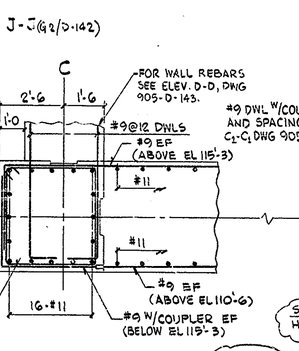

SECTION J3-J3 (D6)

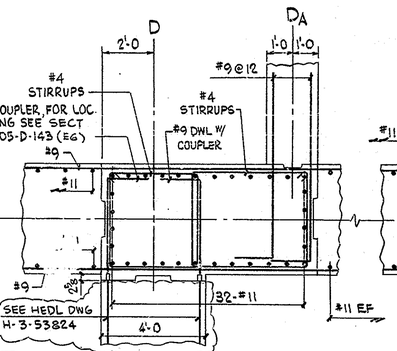

SUPPLIED BY WVNS INSTALLED BY CS-139

SECTION J4-J4 (C9)

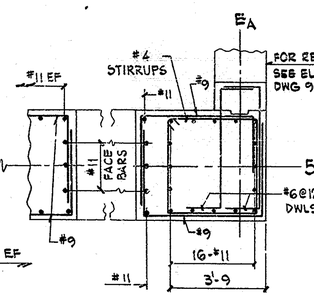

SECTION J5-J5 (D11)

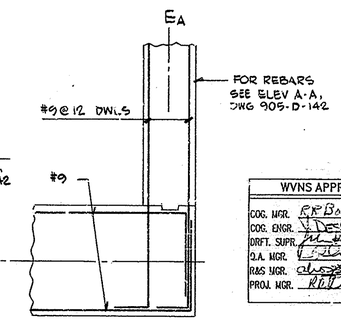

NOTE: FOR VERTICAL REBARS AND STIRRUPS (NOT SHOWN) SEE SECT J6-J6 (H13)

SECTION J7-J7 (B11)

WVNS APPROVAL	
COG. MGR.	R.R. Bancroft
COG. ENGR.	L. DeSchamp
DRFT. SUPR.	
Q.A. MGR.	
R&S MGR.	
PROJ. MGR.	

REFERENCE DRAWINGS:

FOUNDATIONS, PLAN AT EL 100'-0 SH 1	905-D-122
WALL ELEVATIONS M&R - SH 1	905-D-142
WALL ELEVATIONS M&R - SH 2	905-D-143
PLAN EL 124'-0	905-D-146
WALL ELEVATIONS FROM EL 124'-0 TO 145'-3	905-D-147
V.R. - WALL DETAILS	905-D-165
REBAR INSTALLATION (HEDL)	H-3-53824 & 53869
DUCT SHIELDING & ASSEMBLY DETAILS	905-D-199

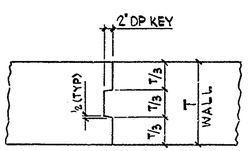

VER'T. CONST. JOINT IN WALLS
N.T.S.

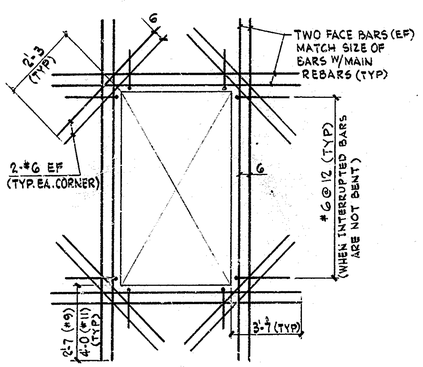

ADD'L REBARS AT OPENING
N.T.S.

① DIAGONAL BARS AROUND OPENINGS (2-#6) ARE FOR SHRINKAGE/CRACK CONTROL AND SHALL BE USED AT ALL OPENINGS REGARDLESS OF SIZE OR SHAPE
② THE FACE BARS INDICATED ABOVE ARE MINIMUMS, INTENDED MAINLY FOR SMALL OPENINGS (≤ 3'), AND SHALL BE USED WHEN NO SPECIFIC LOCAL REQUIREMENTS ARE INDICATED.

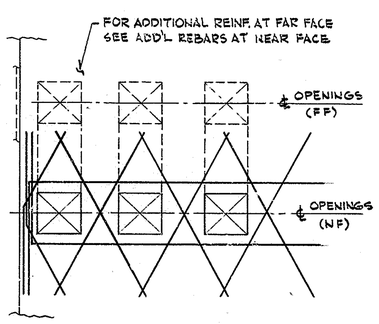

NOTE: ALL ADD'L REBARS ARE #6.

DETAIL 'X' (C6)
N.T.S.

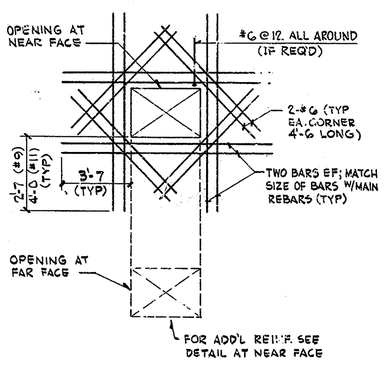

ADD'L REBARS AT 'Z' OPENING
N.T.S.

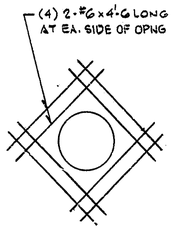

ADDITIONAL REBARS AT ROUND OPENING
N.T.S.

FOR DRAWING INDEX SEE DRAWING NO.

APF RVD WVNS CO.		EBASCO SERVICES INCORPORATED
PROJECT MGR	4/12/87	A/E O.F.S. NO. 2338 TASK ORDER 009
ENGINEER/SUPV	2/13/87	FOR WEST VALLEY NUCLEAR SERVICES COMPANY, INC WEST VALLEY, NEW YORK
LEAD DISC. ENGR	2/13/87	WEST VALLEY DEMONSTRATION PROJECT
DESIGN R. PARASHURAMA	2-13-87	VITRIFICATION FACILITY
CHECKED A.G. SERAPHIDES	2-13-87	WALL ELEVATIONS M&R SH 4
DRAWN V. SEKERKA	DATE 2-13-87	FROM EL 100'-0 TO EL 122'-0

DE-AC07-81NE44139 PROJECT NO.	SIZE D	INDEX CODE NUMBER AREA / DR. TYP / CL / ORIG		DRAWING NO. 905D-145	REV. 4
19-CWV-02275 SUBCONTRACT NO.					
ISSUED FOR CONSTRUCTION	SCALE 3/8" = 1'-0 U.N.	SPEC. CODES		A/E SHEET NO. 905-D-145 C	