VERIFY ALL DOCUMENTS FOR CURRENT REVISION AND PENDING CHANGES PRIOR TO EACH USE.
INIT_____ DATE_____

905-D-144

| REV NO | DATE | REVISION | DR | CH | APPROVED | | |
|---|---|---|---|---|---|---|---|
| B | 4-21-87 | GENERAL REVISION AS PER EBAR #927 | VS | SC | | | |
| C | 5-16-88 | GENERAL REVISION | VS | SC | | | |
| 0 | 5-31-88 | ER 1376 | | M | | | |
| 1 | 7-1-88 | REV. PER ECN # 2509 | DRS | M | | | |
| 2 | 11-11-89 | REV. PER ECN 3121 | LR | DRS | | | |
| 3 | 3-30-90 | REV. PER ECN VF-1-039 | GW | DRS | | | |

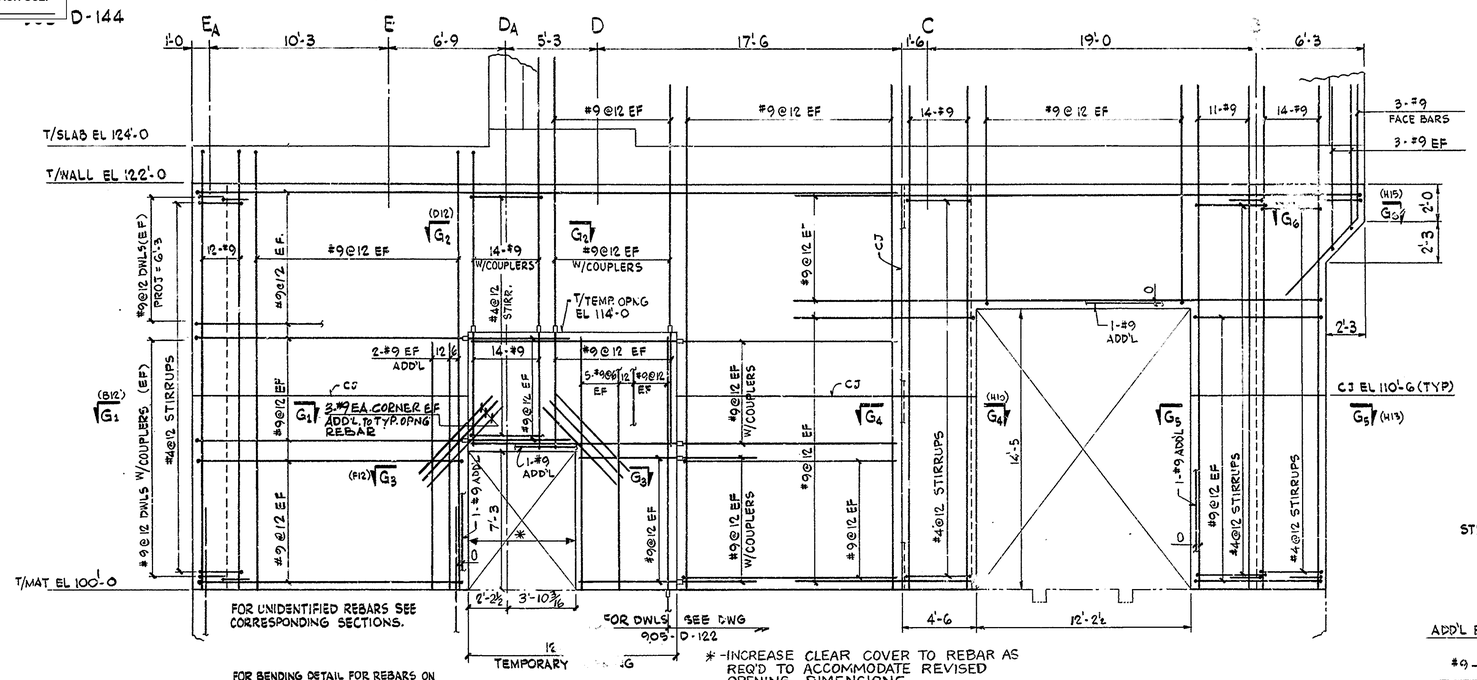


ELEVATION G-G (G5/D-142)

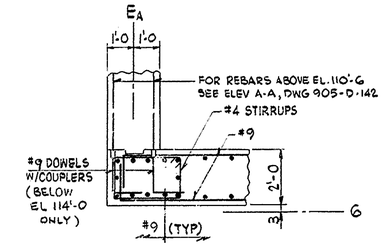


SECTION $G_1$-$G_1$ (C1)
3/8" = 1'-0

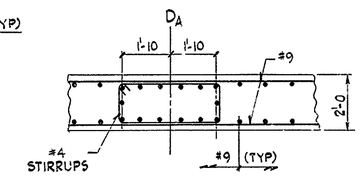


SECTION $G_2$-$G_2$ (B3)
3/8" = 1'-0

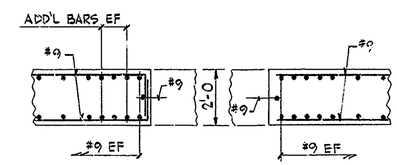


SECTION $G_3$-$G_3$ (D3)
3/8" = 1'-0

## NOTES:

1- FOR GENERAL NOTES SEE DWG. 905-D-122
2- FOR REFERENCE DWGS. SEE DWG. 905-D-122 & 142
3- FOR ADDITIONAL PENETRATIONS AND/OR PENETRATION DIMENSIONS SEE DWG. 905-D-140
4
5- FOR ADDITIONAL REBARS AT OPENINGS SEE DETAIL ON DWG. 905-D-145 (K4, K10)
6- FOR VERTICAL JOINTS DETAIL SEE DWG. 905-D-145 (K2)

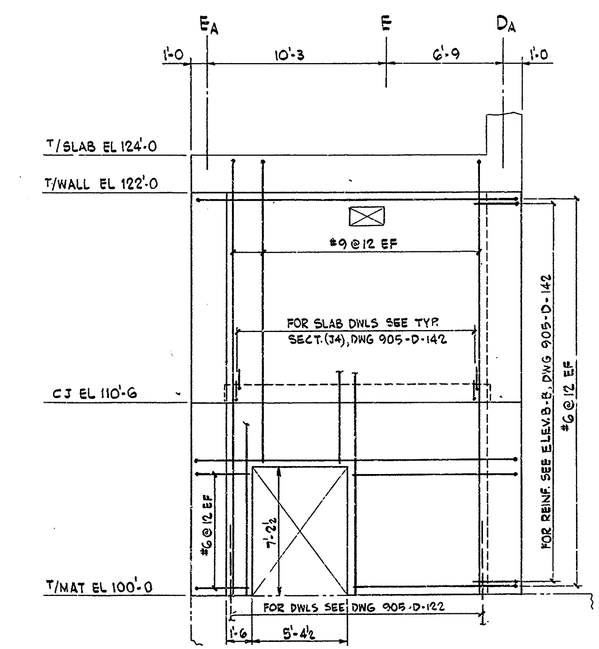


ELEVATION H-H (F3/D-142)

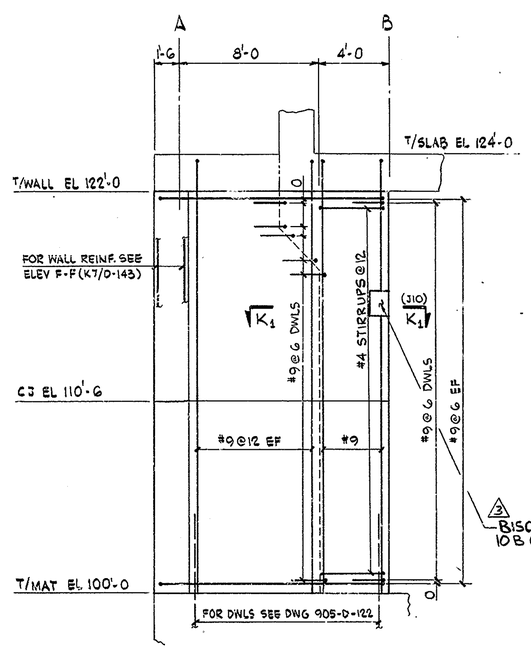


ELEVATION K-K (C2/D-142)

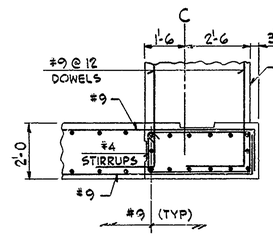


SECTION $G_4$-$G_4$ (C7)
3/8" = 1'-0

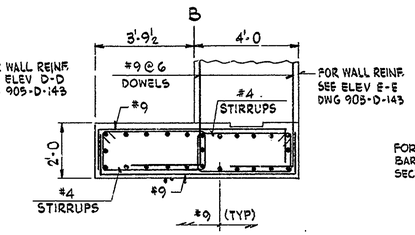


SECTION $G_5$-$G_5$ (C10)
3/8" = 1'-0

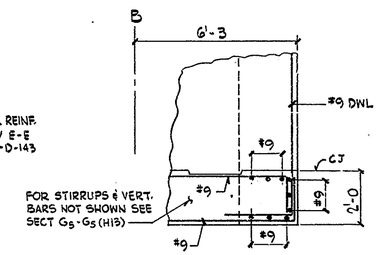


SECTION $G_6$-$G_6$ (B10)
3/8" = 1'-0

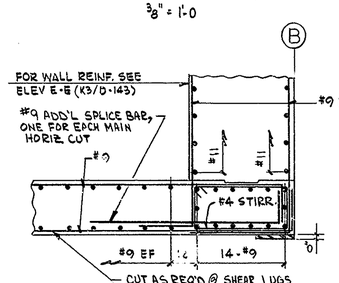


3 SECTION $K_1$-$K_1$ (I8)
3/8" = 1'-0

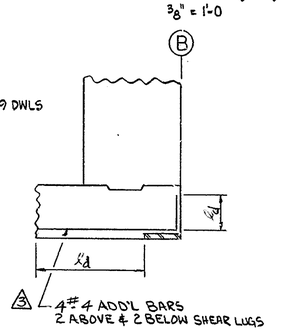


## REFERENCE DRAWINGS:

| | |
|---|---|
| WALL ELEVATIONS - SH. 1 - FROM EL 100'-0 TO 122'-0 | 905-D-142 |
| WALL ELEVATIONS - SH. 2 - FROM EL 100'-0 TO 122'-0 | 905-D-143 |
| WALL ELEVATIONS - SH. 2 - FROM EL 124'-0 TO 143'-3 | 905-D-148 |

FOR DRAWING INDEX SEE DRAWING NO. _____

| | | |
|---|---|---|
| APPRVD WVNS CO. | | EBASCO SERVICES INCORPORATED A/E O.F.S. NO. 2388 TASK ORDER 009 FOR WEST VALLEY NUCLEAR SERVICES COMPANY, INC. WEST VALLEY, NEW YORK |
| PROJECT MGR. M.D. Wanzo | 2/17/87 | |
| ENGINEER (SUPV) A. Ranjuka | 2/13/87 | |
| LEAD DISC. ENGR. A. Ranjuka | 2/13/87 | WEST VALLEY DEMONSTRATION PROJECT |
| DESIGN L. PARASHURAMA | 2-13-87 | VITRIFICATION FACILITY |
| CHECKED A.G. SERAPHIDES | 2-13-87 | WALL ELEVATIONS M & R SH 3 |
| DRAWN V. SCHERKA | DATE 2-13-87 | FROM EL 100'-0 TO EL 122'-0 |
| DE-AC07-81NE44139 PROJECT NO. | | SIZE D; INDEX CODE NUMBER: AREA, DR. TYP, CL, ORIG; DRAWING NO. 905D-144; REV. 3 |
| 19-CWV-02275 SUBCONTRACT NO. | | |
| ISSUED FOR CONSTRUCTION | | SCALE 1/4"=1'-0 U.N.; SPEC. CODES; A/E SHEET NO. 905-D-144 C |

WVNS APPROVAL
CONS. MGR. R.R. Bruno
COG. ENGR. V. DeGrego
DRFT. SUPR.
Q.A. MGR.
R&S MGR. Alex Strickland
PROJ. MGR. F.M. Bunger