VERIFY ALL DOCUMENTS FOR CURRENT REVISION AND PENDING CHANGES PRIOR TO EACH USE.
INIT_____ DATE_____

143

REV NO	DATE	REVISION	DR	CH	APPROVED		
B	~~4-21-87~~	GENERAL REVISION AS PER EBAR #027	VS	SC	[illegible]	[illegible]	MDW
C	5-16-88	GENERAL REVISION	VS	SC	[illegible]	[illegible]	MDW
0	5-31-88	ER 1376		M	[illegible]		
1	6-30-88	REVISED PER ECN 2509	LRK	M	[illegible]		
2	4-3-90	REV FCN-1-013 & FCN-1-008	GW				

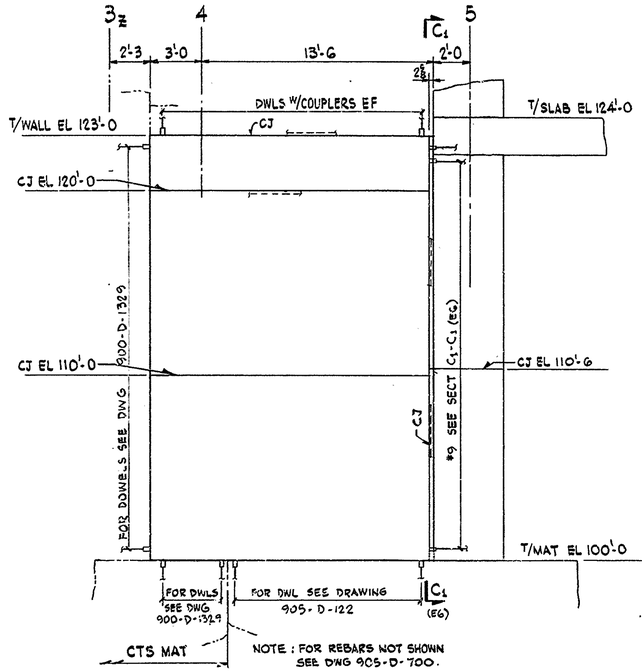

ELEVATION (C1/D-142) - AS SHOWN
ELEVATION (E2/D-142) - OPP. HAND

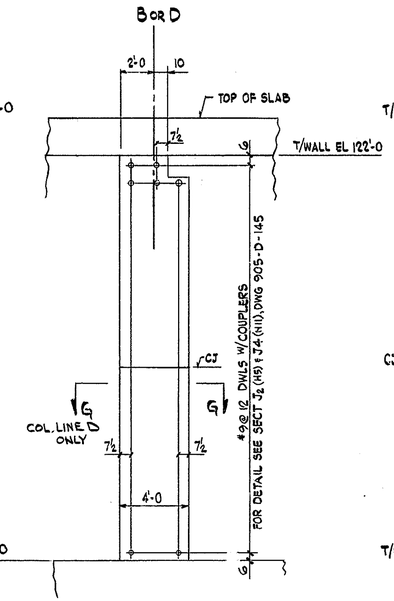

SECTION C_1-C_1 (E3)
AT COL. LINE B - AS SHOWN
AT COL. LINE D - OPP. HAND

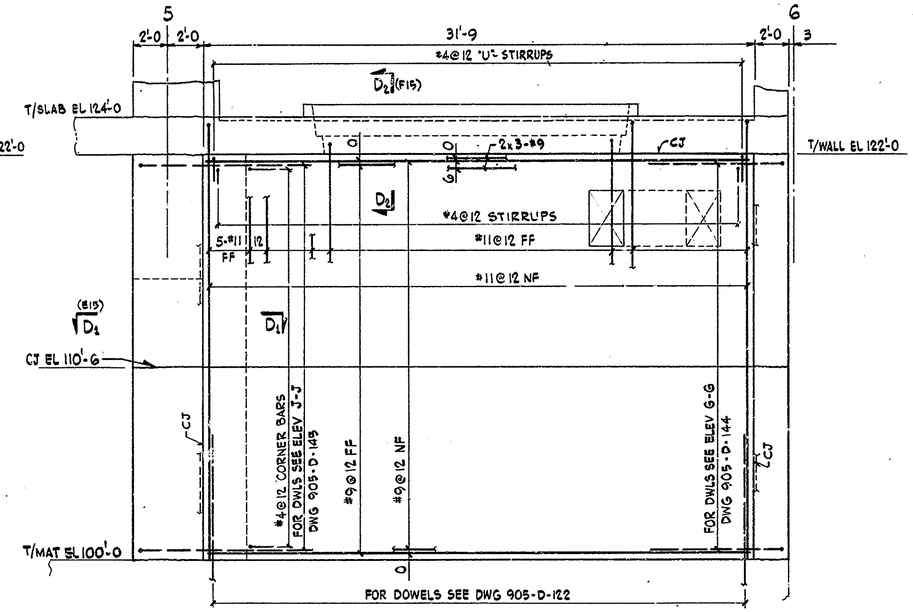

ELEVATION D-D (D5/D-142)

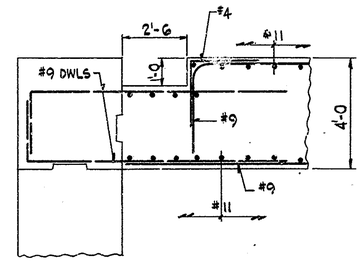

SECTION D_1-D_1 (C8)
3/8" = 1'-0

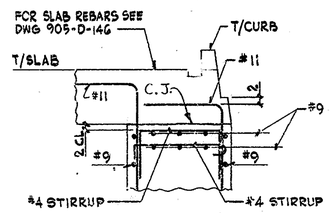

SECTION D_2-D_2 (A10)
3/8" = 1'-0

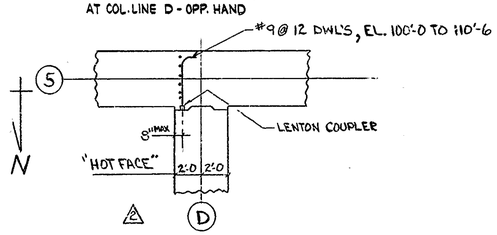

SECTION G-G @ COL. LINE D

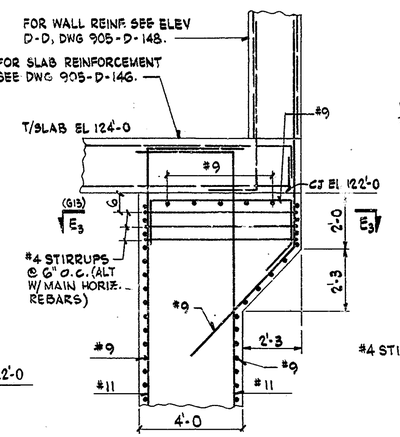

SECTION E_1-E_1 (H2)
3/8" = 1'-0

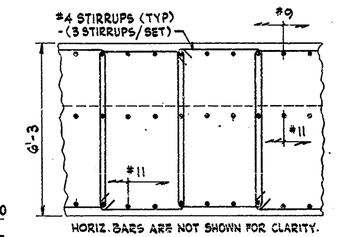

SECTION E_3-E_3 (G9)
3/8" = 1'-0

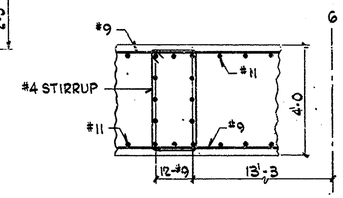

SECTION E_2-E_2 (I3)
3/8" = 1'-0

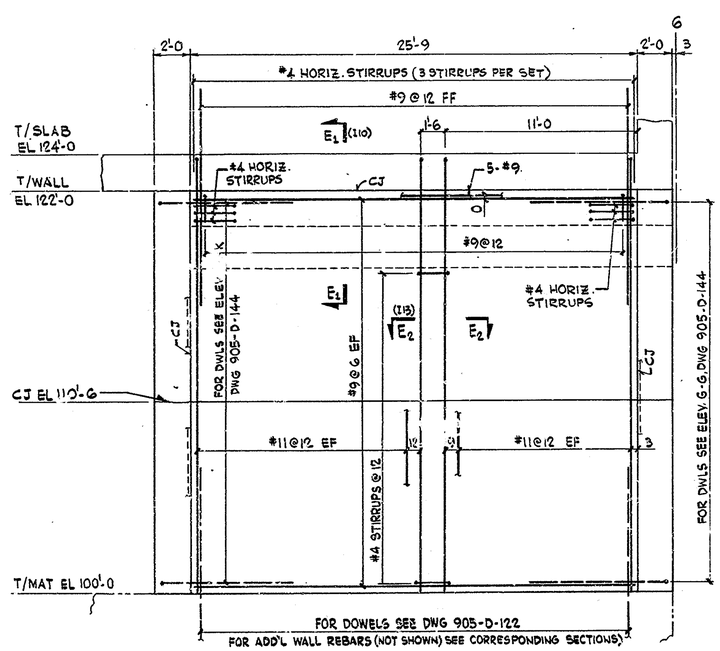

ELEVATION E-E (B5/D-142)

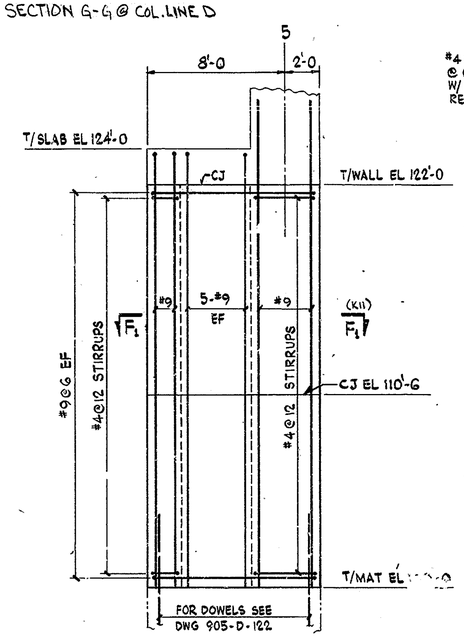

ELEVATION F-F (A3/D-142)

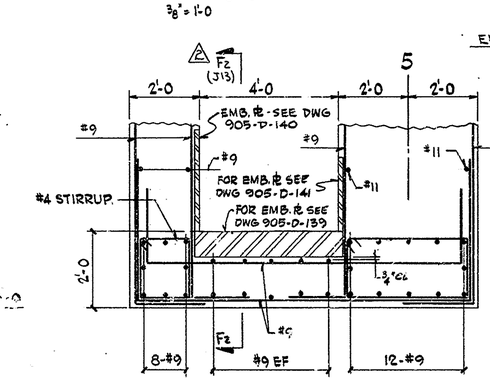

SECTION F_1-F_1 (I8)
1/2" = 1'-0

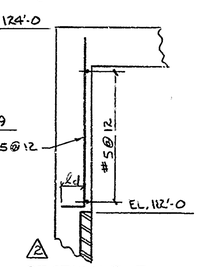

SECTION F_2-F_2 (J10)

NOTES:

1. FOR GENERAL NOTES SEE DWG 905-D-122
2. FOR REFERENCE DWGS SEE DWG 905-D-122 & 142
3. FOR ADDITIONAL PENETRATIONS AND/OR PENETRATION DIMENSIONS SEE DWG 905-D-139.
4. FOR ADD'L REBARS AT OPENINGS SEE DET. ON DWG. 905-D-145 (K4, K10)
5. DELETED
6. FOR VERT. JOINT DETAIL SEE DWG. 905-D-145 (K2)

REFERENCE DRAWINGS:

FOUNDATIONS, PLAN AT EL 100'-0 - SH. 1	905-D-122
WALL ELEVATIONS, M&R - SH 1	905-D-142
WALL ELEVATIONS, M&R - SH 3	905-D-144
WALL ELEVATIONS, M&R - SH 4	905-D-145
PLAN AT EL 124'-0	905-D-146
WALL ELEVATIONS, M&R	905-D-148
CTS LENTON LOCATION (AS BUILT)	900-D-1329
WALL ELEVATION, M&R - COL. LINE 3Z TO 5	905-D-700
WALL PENETRATIONS	905-D-139 TO 141

FOR DRAWING INDEX SEE DRAWING NO. _____

WVNS APPROVAL	
COG. MGR.	[illegible]
COG. ENGR.	[illegible]
DRFT. SUPR.	[illegible]
Q.A. MGR.	[illegible]
R&S MGR.	[illegible]
PROJ. MGR.	[illegible]

APPRVD WVNS CO.		EBASCO SERVICES INCORPORATED A/E O.F.C. NO. 2388 TASK ORDER 009
PROJECT MGR. [illegible]	2/13/87	FOR WEST VALLEY NUCLEAR SERVICES COMPANY, INC WEST VALLEY, NEW YORK
ENGR. SUPV [illegible]	2/13/87	
LEAD DISC ENGR [illegible]	2/13/87	WEST VALLEY DEMONSTRATION PROJECT
DESIGN R. VADASHURAMA	2-13-87	VITRIFICATION FACILITY WALL ELEVATIONS M&R SH2 FROM EL 100'-0 TO EL 122'-0
CHECKED A.G. SERAPHIDES	2-13-87	
DRAWN V. SEKERKA	DATE 2-13-87	

DE-AC07-81NE44139 PROJECT NO.	SIZE	INDEX CODE NUMBER				DRAWING NO.	REV.
		AREA	DR. TYP	CL	ORIG		
19-CWV-02275 SUBCONTRACT NO.	C					905D-143	2
ISSUED FOR CONSTRUCTION	SCALE 1/4" = 1'-0 U.N.		SPEC. CODES			A/E SHEET NO. 905-D-143 C	