VERIFY ALL DOCUMENTS FOR CURRENT REVISION AND PENDING CHANGES PRIOR TO EACH USE.
INIT_____ DATE_____

-D-050 D

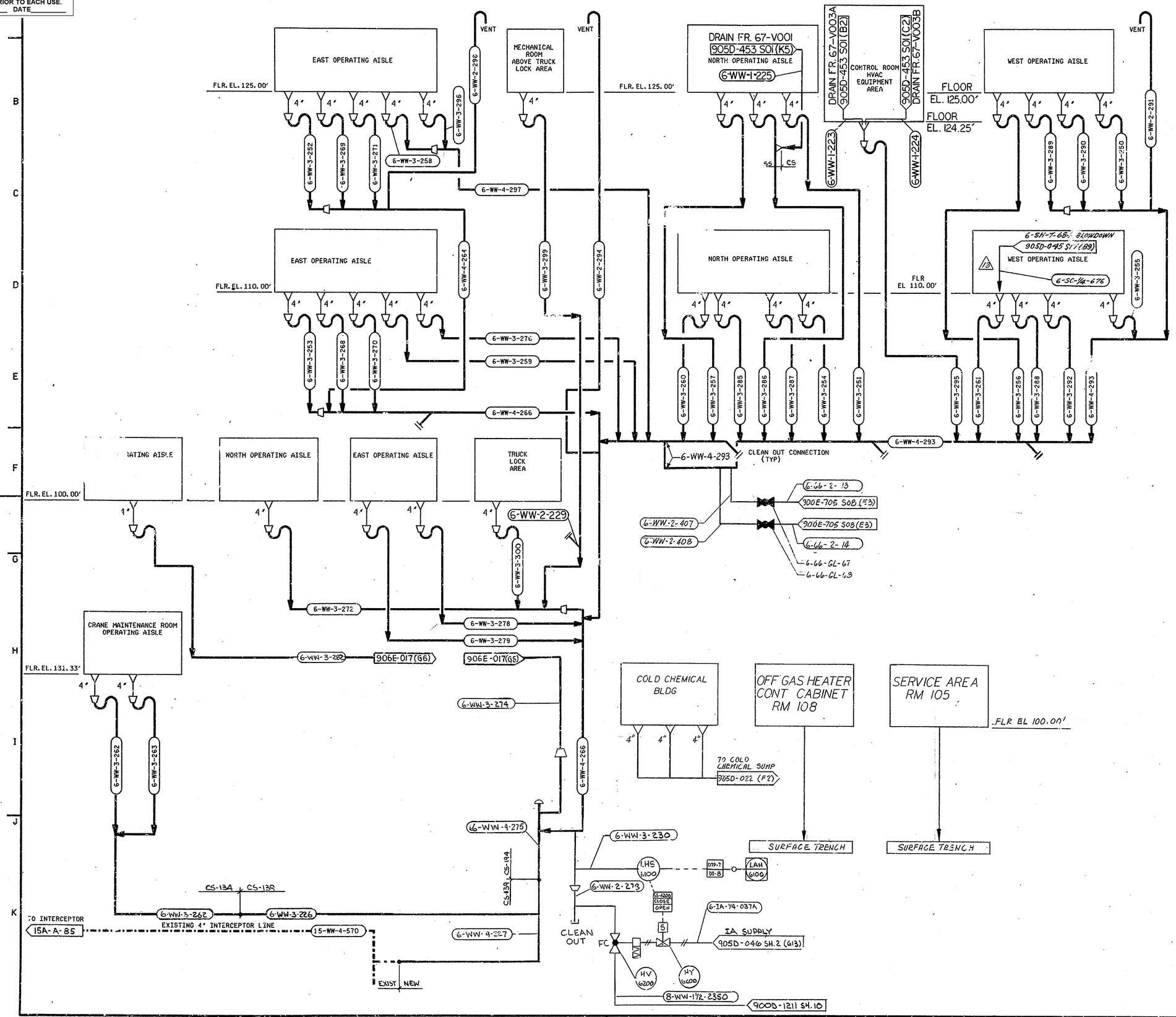

NO.	DATE	REVISION	DR	CH	APPROVED		
B	02-19-88	GENERAL REVISION PER EBAR 1093	TJX	RJL	RJL	PJE FSK	MDW
C	06-02-88	GENERAL REVISION PER EBAR 1093A	RJL	PJE	RJL	PJE FSK	MDW
D	6-28-89		PJS	AC	RJL	AC	
		GENERAL REVISION					
0	7/13/89	ER 16446					
13	4-19-97	ECN 11959					
10	1-16-96	EEV/ECN 9414	RMS				
11	12-10-96	ECN 10332	GN	WRS			
12	4-18-97	ECN TM-2580	GN	WRS			

LEGEND

EXISTING LINE

NOTES

1. THIS DWG. SUPERSEDES DWG. 905-D-012.
2. ALL INSTRUMENT TAG NUMBERS ARE PRECEDED BY SYSTEM DESIGNATOR WW.
3. ALL DRAIN LINES TO SLOPE TOWARD SUMP $\frac{1}{16}$ INCH PER FOOT MINIMUM.

REFERENCE DRAWINGS

P&ID VITRIFICATION DRAINAGE SYSTEM HIGH LEVEL WASTE	905-D-011
PIPING PLAN AT EL 124'-0 VITRIFICATION DRAINAGE SYSTEM	905-D-061
VITRIFICATION FACILITY FLOOR DRAINS AT EL 125.00' & EL 130.00'	905-D-082 S01
VITRIFICATION FACILITY DRAIN PIPING BELOW EL 125.00' & EL 130.00'	905-D-082 S02
VITRIFICATION FACILITY FLOOR DRAINS AT EL 110.00'	905-D-082 S03
VITRIFICATION FACILITY DRAIN PIPING BELOW EL 110.00'	905-D-082 S04
VITRIFICATION FACILITY DRAINAGE PIPING TO INTERCEPTOR	905-D-082 S05

NEEDED TO COMPLETE THIS DRAWING

1. INTERFACES WITH ASSOCIATED SYSTEMS.
2. VALVE & INSTRUMENT DETAILS FOR SERVICES DESIGNATED AS FUTURE INSTALLATION.

WVNS APPROVAL

COG. MGR. N. D. Defeo
COG. ENGR. R. J. Vitko
DFT. SUPR. 7/13/89
Q.A. MGR. for DLS
R&S MGR.

FOR DRAWING INDEX SEE DRAWING NO.

APPRVD WVNS CO.		EBASCO SERVICES INCORPORATED A/E O.F.S. NO. 2388 TASK ORDER 009
PROJECT MGR M. D. WEINGART	01-07-88	FOR: WEST VALLEY NUCLEAR SERVICES COMPANY, INC WEST VALLEY, NEW YORK
ENGINEER SUPV F. S. KOWALCZYK	01-07-88	
LEAD DISC ENGR F. EKNER	01-07-88	WEST VALLEY DEMONSTRATION PROJECT
DESIGN R. J. LEWKO	01-07-88	
CHECKED S. ELIA	01-07-88	P & ID VITRIFICATION DRAINAGE SYSTEM LOW LEVEL
DRAWN T. J. KITZ	DATE 01-07-88	
DE-AC07-81NE44139 PROJECT NO.		SIZE D; INDEX CODE NUMBER (AREA, DR. TYP, CL, ORIG); DRAWING NO. 905-D-050; REV. 13
19-CWV-02275 SUBCONTRACT NO.		
ISSUED FOR CONSTRUCTION		SCALE NONE; SPEC. CODES; A/E SHEET NO. 905-D-050 D

FILE NAME: 9050050 REV. 03 UTC: (133,064)
PLOT REQ NO. PJ52603 DATE: 06-26-03