VERIFY ALL DOCUMENTS FOR CURRENT REVISION AND PENDING CHANGES PRIOR TO EACH USE.
INIT_____ DATE_____

905-D-046 S02 C

NO.	DATE	REVISION	DR	CH	APPROVED		
B	~~08-23-88~~		BFR	RJL	RJL FJE	FSK	MDW
		GENERAL REVISION					
C	06-28-89		RJS	AC	RJL	AC FJE	FSK
		GENERAL REVISION					
J	7/13/89	ER1646			JRH		
20	4/18/97	ECN 10514, TM-2580	CW	HAB			
20	12/03/98	REDRAWN/NO CHANGES	BP				

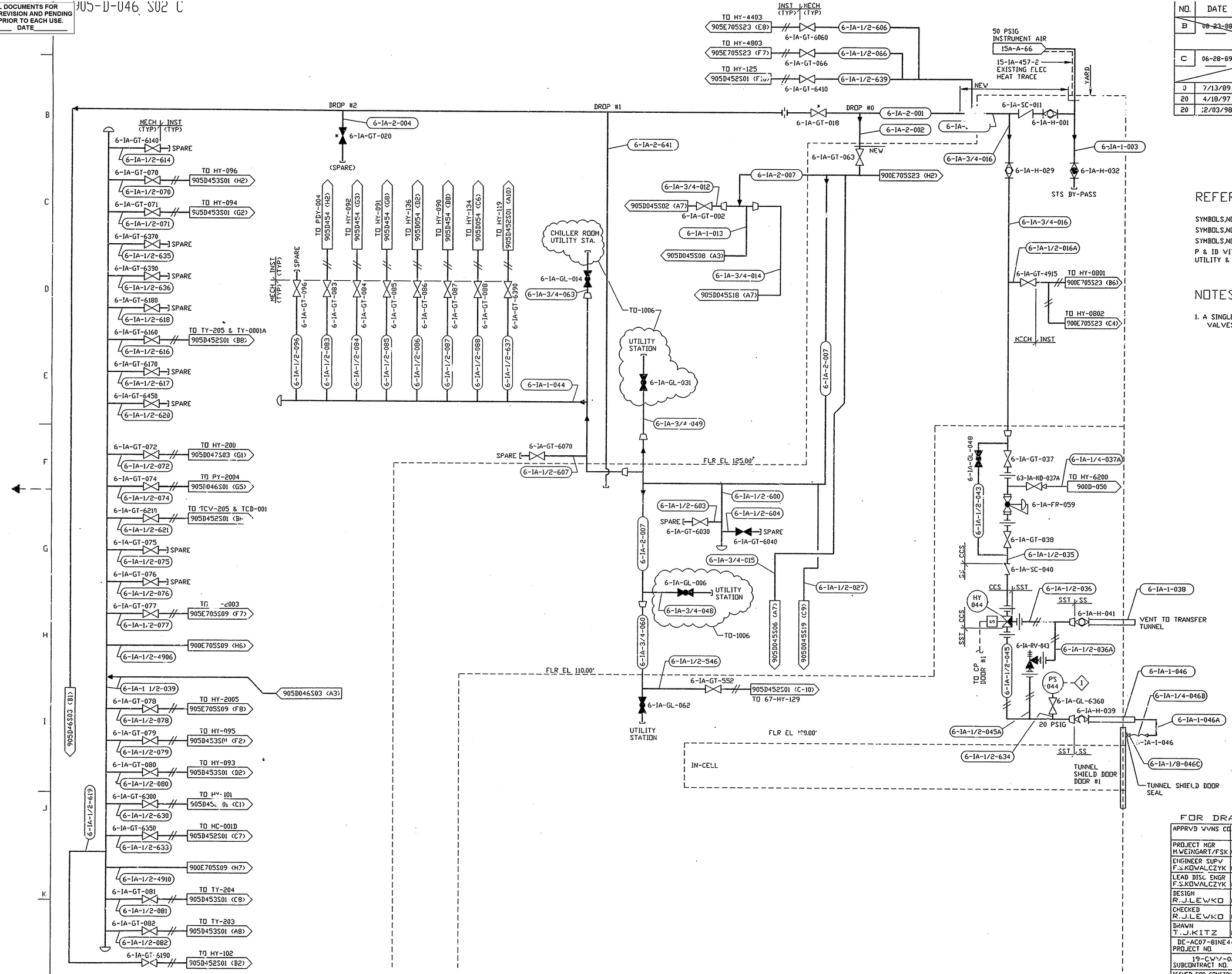

REFERENCE DRAWINGS:

SYMBOLS,NOTES & LEGEND	900-D-1306
SYMBOLS,NOTES & LEGEND	900-D-1307
SYMBOLS,NOTES & LEGEND	900-D-1308
P & ID VITRIFICATION FACILITY UTILITY & INSTRUMENT AIR SYS	905-D-029

NOTES:

1. A SINGLE ASTERISK (*) INDICATES EXISTING VALVES AND EQUIPMENT TO BE RETAINED.

FOR DRAWING INDEX SEE DRAWING NO.

APPRVD WVNS CO		EBASCO SERVICES INCORPORATED
PROJECT MGR M.WEINGART/FSK	01-22-88	A/E O.F.S. NO.2388 TASK ORDER 009 FOR WEST VALLEY NUCLEAR SERVICES COMPANY,INC WEST VALLEY,NEW YORK
ENGINEER SUPV F.S.KOWALCZYK	01-22-88	
LEAD DISC ENGR F.S.KOWALCZYK	01-22-88	WEST VALLEY DEMONSTRATION PROJECT
DESIGN R.J.LEWKO	01-22-88	
CHECKED R.J.LEWKO	01-22-88	P & ID VITRIFICATION FACILITY INSTRUMENT AIR SYSTEM
DRAWN T.J.KITZ	DATE 01-22-88	
DE-AC07-81NE44139 PROJECT NO.		SIZE D; INDEX CODE NUMBER: AREA, DR.TYP, CL, ORIG; DRAWING NO. 905D-046; REV. 20
19-CWV-02275 SUBCONTRACT NO.		
ISSUED FOR CONSTRUCTION		SCALE NONE; SPEC. CODES; A/E SHEET NO. 905-D-046 S02 C

E046D002 1=1.00

FILE NAME:905D46B REV.02 UIC(133.0641)
PLOT REQ NO. PJS-2610 DATE:06-26-89

Thu Dec 31 08:35:17 1998 HAB