905-D-045 S01

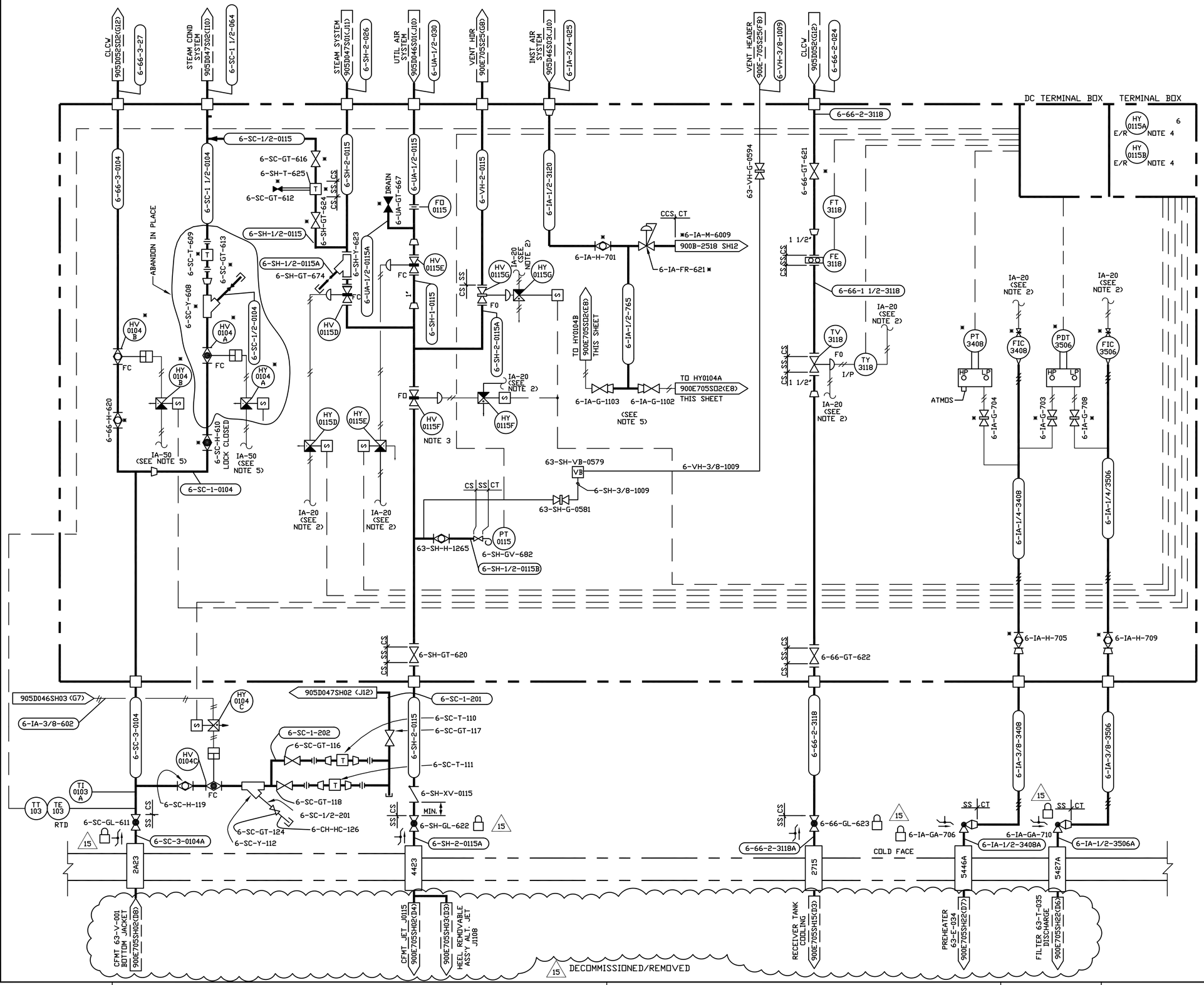

NO.	DATE	REVISION	DR	CH	APPROVED		
B	06-15-88		TJK	RJL	RJL-SN	AJD	MDW
GENERAL REVISION INCLUDING TA 767							
C	10-31-88		PJS	RJL	RJL	FSK	NES
GENERAL REVISION INCLUDING TA 821							
D	4-13-89		RJL	JJV	FSL	FSK	???
GENERAL REVISION							
0	6-12-89	ER 1631			JRH		
10	5-5-95	ECN 8911	RAS	KQ			
11	6/17/96	REV PER ECN 9987	SRD	DRS	ERB		
12	2/20/97	ECN 10520	LRP	DRS			
13	03/02/2000	ECN 12318	BP	HAB			
14	6/26/2000	ECN 12690	MJC	HAB			
15	2/7/05	ECN 26189	DAK	HAB			
7	1/11/95	REV PER ECN 8517	TMM	GLS	HAJ		
8	2/9/95	GEN REV PER ECN 8579	MJL	KQ	RAA		
9	3/14/95	REV PER ECN 8760	MJL	HAB	RWM		

NOTES:

1. NEW INSTRUMENTS & VALVES TO BE INSTALLED ON THIS EXISTING RACK ARE MARKED WITH SINGLE ASTERISK (*).
2. IA 20 AIR SUPPLY SERVICE FROM MANIFOLD 6-IA-M-6009. SEE DWG 900B-2518 SH12.
3. FIELD MODIFY FAIL ACTION OF VALVE HV-0115F FROM FAIL CLOSE TO FAIL OPEN. (TD-0038)
4. ELECTROMAGNETIC RELAYS DISCONNECTED AND ABANDONED IN TERMINAL BOX AND REMAIN AS SPARES.
5. IA 50 AIR SUPPLY SERVICE FROM MANIFOLD 6-IA-M-6021 SEE DWG 900B-2518 SH 12.

15 LOCKED AND TAGGED 'OUT OF SERVICE'

VERIFY ALL DOCUMENTS FOR CURRENT REVISION AND PENDING CHANGES PRIOR TO EACH USE
INIT _____ DATE _____

FOR DRAWING INDEX SEE DRAWING NO. _____

APPRVD WVNS CO.		1-7-88
PROJECT MGR	M.D. WEINGART	1-7-88
ENGINEER SUPV	A.J. DIFILIPPO	1-7-88
LEAD DISC ENGR	S. NATH	1-7-88
DESIGN	A. ZILG	1-7-88
CHECKED	B.F. REYNOLDS	1-7-88
DRAWN	T.J. KITZ	1-7-88

EBASCO SERVICES INCORPORATED
A/E D.F.S. NO. 2388 FOR TASK ORDER 009
WEST VALLEY NUCLEAR SERVICES COMPANY, INC
WEST VALLEY, NEW YORK

WEST VALLEY DEMONSTRATION PROJECT

VITRIFICATION P&ID FACILITY
INSTRUMENT RACK 3W2-1A

DE-AC0T-81NE44139 PROJECT NO.
19-CWV-02275 SUBCONTRACT NO.
ISSUED FOR CONSTRUCTION

SIZE	INDEX CODE NUMBER				DRAWING NO.	REV.
	AREA	DR. TYP	CL	DRIG		
D					905D-045	15

SCALE: NONE | SPEC. CODES | A/E SHEET NO. 905-D-045 S01 C

CAD DRAWING - Do not revise this original.

149752 1=1.00