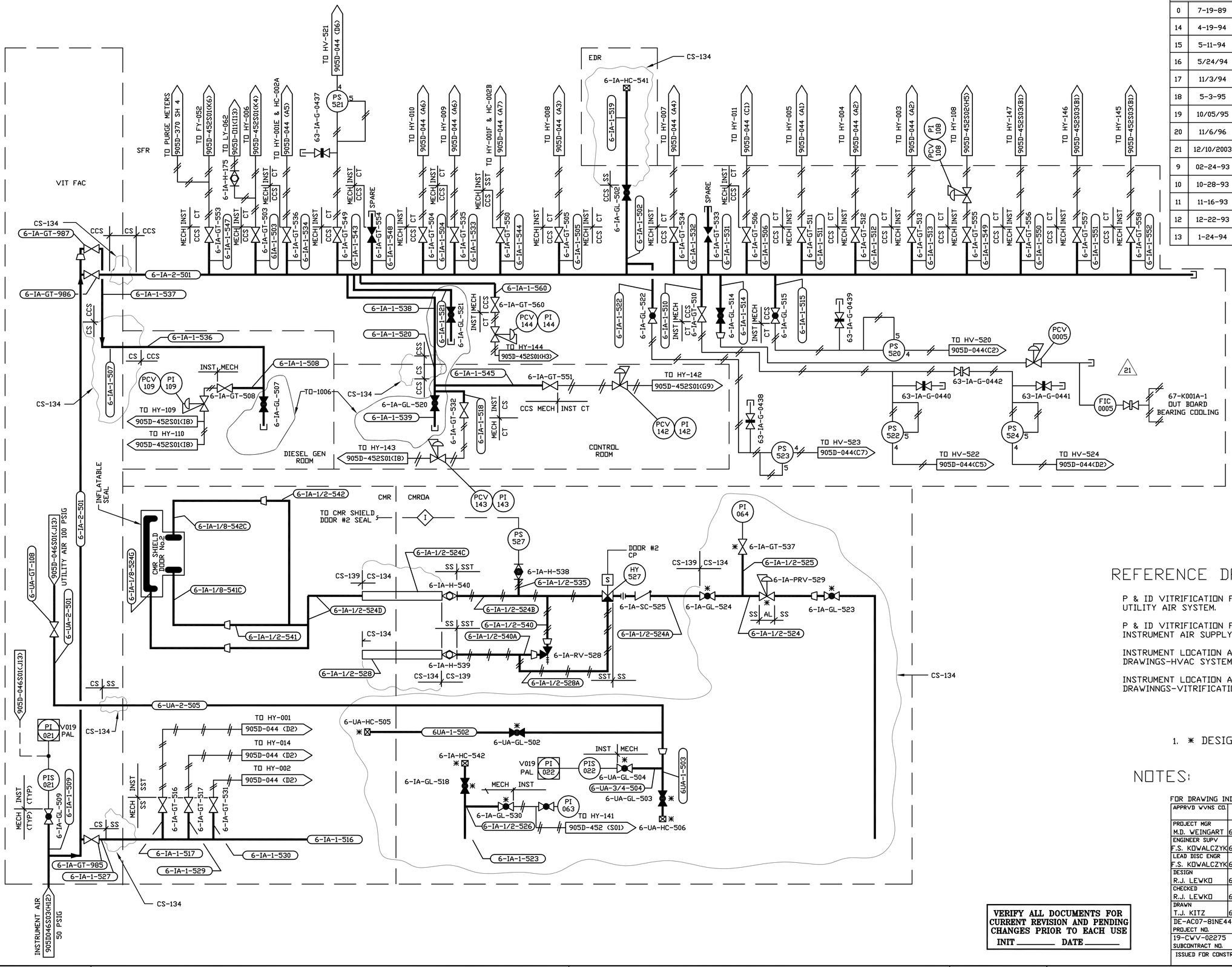

NO.	DATE	REVISION	DR	CH	APPROVED
0	7-19-89	ER 1649			JRH
14	4-19-94	REV'D PER ECN 7791	KGZ	HAB	ZZ
15	5-11-94	REV'D PER ECN 7470	MJL	HAB	JCD
16	5/24/94	REV'D PER ECN 7922	MJL	KQ	RMB
17	11/3/94	REV'D PER ECN 8375	AAJ	DRS	ERB
18	5-3-95	REV'D PER FCN NOX-T191	JHS	GLS	RWM
19	10/05/95	REV'D PER ECN 9285	BP	KQ	
20	11/6/96	REV'D PER ECN 10324	AAJ		
21	12/10/2003	ECN 25790		HAB	
9	02-24-93	REV'D PER ECN 5655	SRC	DRS	PAN
10	10-28-93	REV'D PER ECN 7017	KGZ	DRS	JRY
11	11-16-93	REV'D PER ECN 7082	HJL	DRS	JRY
12	12-22-93	REV'D PER ECN 7161	PAM	HAB	GGT
13	1-24-94	REV'D PER ECN 7444	LRK	DRS	DJR

REFERENCE DRAWINGS:

P & ID VITRIFICATION FACILITY UTILITY AIR SYSTEM.	905-D-046 S01
P & ID VITRIFICATION FACILITY INSTRUMENT AIR SUPPLY.	905-D-046 S03
INSTRUMENT LOCATION ARRANGMENT DRAWINGS-HVAC SYSTEM.	905-D-370 SH. 1-7
INSTRUMENT LOCATION ARRANGEMENT DRAWINNGS-VITRIFICATION FACILITY.	905-D-378 SH. 1-4

NOTES:

1. * DESIGNATES EXISTING EQUIPMENT

FOR DRAWING INDEX SEE DRAWING NO._____

APPRVD WVNS CO.		EBASCO SERVICES INCORPORATED
PROJECT MGR M.D. WEINGART	6/30/87	A/E D.F.S. NO. 2388 FOR TASK ORDER 009
ENGINEER SUPV F.S. KOWALCZYK	6/30/87	WEST VALLEY NUCLEAR SERVICES COMPANY, INC WEST VALLEY, NEW YORK
LEAD DISC ENGR F.S. KOWALCZYK	6/30/87	WEST VALLEY DEMONSTRATION PROJECT
DESIGN R.J. LEWKO	6/30/87	P & ID VITRIFICATION FACILITY INSTRUMENT & UTILITY AIR SYS
CHECKED R.J. LEWKO	6/30/87	
DRAWN T.J. KITZ	DATE 6/30/87	
DE-AC07-81NE44139		
PROJECT NO. 19-CWV-02275		
SUBCONTRACT NO.		
ISSUED FOR CONSTRUCTION		

SIZE	INDEX CODE NUMBER				DRAWING NO.	REV.
	AREA	DR. TYP	CL	DRIG		
D					905-D-029	21

SCALE: NONE | SPEC. CODES | A/E SHEET NO. S01

VERIFY ALL DOCUMENTS FOR CURRENT REVISION AND PENDING CHANGES PRIOR TO EACH USE
INIT _____ DATE _____

CAD DRAWING-DO NOT REVISE THIS ORIGINAL

134749 1=1.00