VERIFY ALL DOCUMENTS FOR CURRENT REVISION AND PENDING CHANGES PRIOR TO EACH USE.
INIT_____ DATE_____

D-028

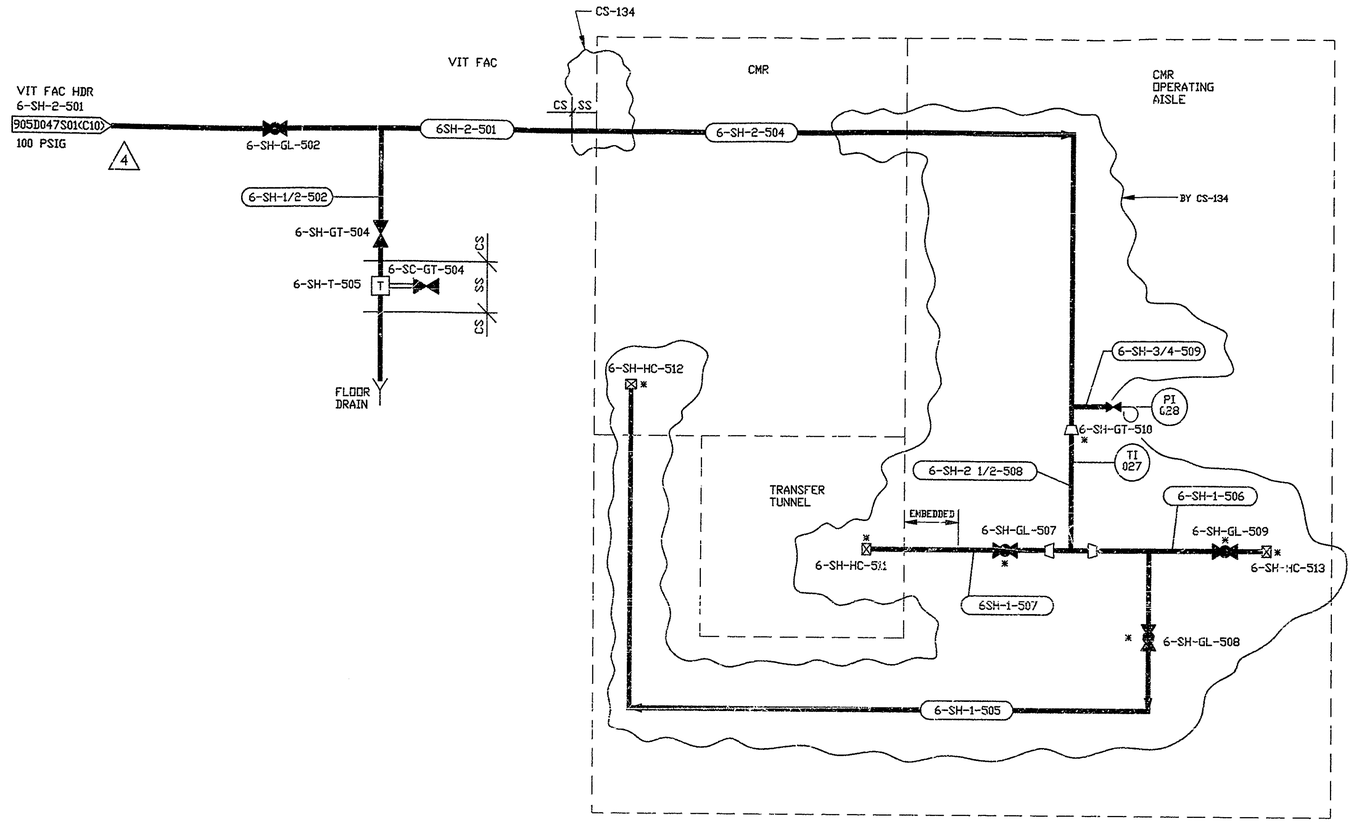

NO.	DATE	REVISION	DR	CH	APPROVED		
B	10/29/87	GENERAL REVISION PER EBAR 1008	TJK	JV	RJL	FSK	MDW
C	6-28-89	GENERAL REVISION	PJS	EMR	RJL	EMR FJE	FJKS
0	7-13-89	ER 1646			JRH		
1	12-12-90	REV'D PER ECN 3165	JAW	KMQ	DJR		
2	3-15-90	REV'D PER ECN 3383	PES	DRS	DJR		
3	5-24-90	REV'D PER ECN 3669	CTC	DRS	DJR		
4	10/16/92	REV'D PER ECN 5250	SRD	DRS			

NOTES:

1. SYSTEM TO BE COLD UNTIL REQD. FOR USE.
2. * DESIGNATES EXISTING EQUIPMENT.

REFERENCE DRAWINGS:

P & ID VITRIFICATION FACILITY STEAM SYSTEM 905-D-047 S01

CAD DRAWING-DO NOT REVISE THIS ORIGINAL

FOR DRAWING INDEX SEE DRAWING NO._____

APPRVD WVNS CO.	
PROJECT MGR M.D. WEINGART	06-30-87
ENGINEER SUPV F.S. KOWALCZYK	06-30-87
LEAD DISC ENGR F.S. KOWALCZYK	06-30-87
DESIGN R.J. LEWKO	06-30-87
CHECKED R.J. LEWKO	06-30-87
DRAWN T.J. KITZ	DATE 06-30-87

EBASCO SERVICES INCORPORATED

A/E O.F.S. NO. 2398 FOR TASK ORDER 009

WEST VALLEY NUCLEAR SERVICES COMPANY, INC
WEST VALLEY, NEW YORK

WEST VALLEY DEMONSTRATION PROJECT

P & ID
VITRIFICATION FACILITY
STEAM SYSTEM

DE-AC07-81NE44139 PROJECT NO.	SIZE	INDEX CODE NUMBER				DRAWING NO.	REV.
		AREA	DR. TYP	CL	ORIG		
19-CWV-02275 SUBCONTRACT NO.	D					905D-028	4
ISSUED FOR CONSTRUCTION	SCALE: NONE		SPEC. CODES			A/E SHEET NO. 905D-028 C	