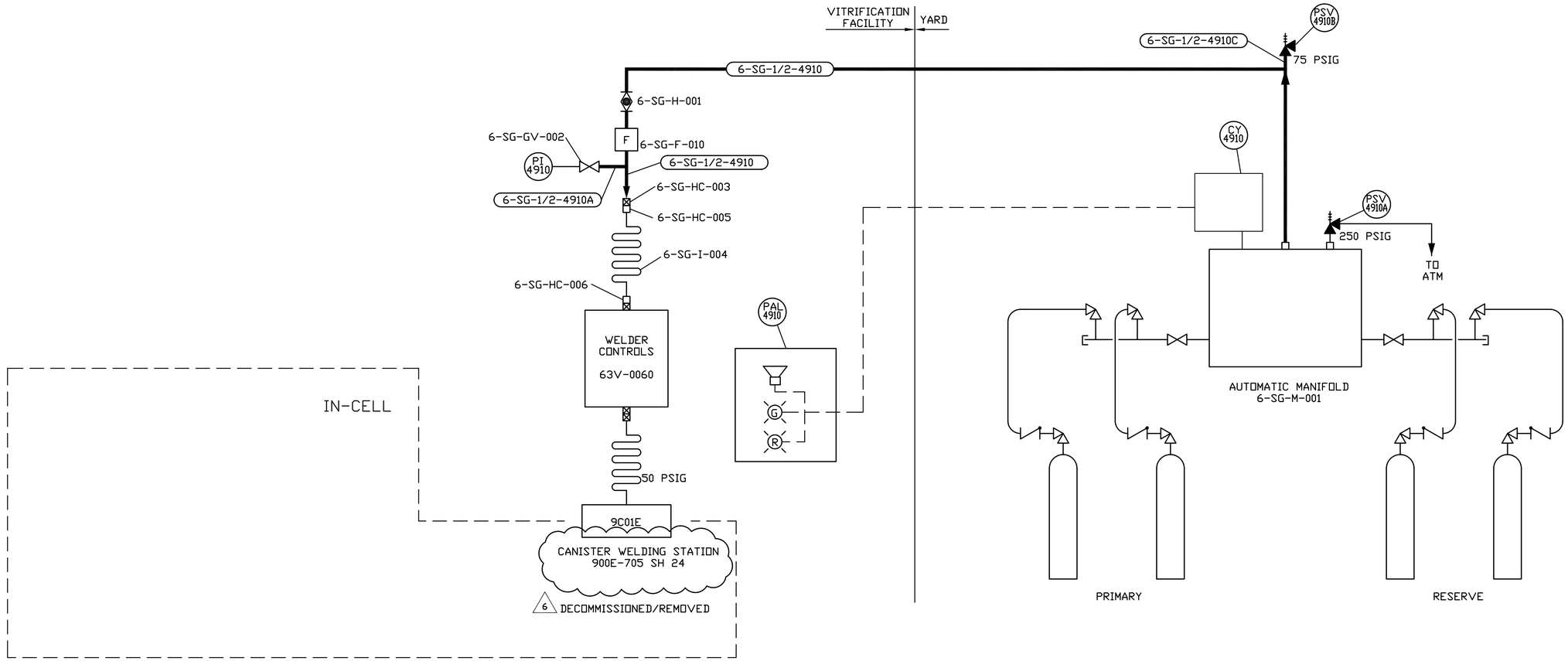

REFERENCE DRAWING

SYMBOLS, NOTES, LEGEND 900D-1306, 1307, 1308

QTY REQD	ITEM NO.	NOMENCLATURE OR DESCRIPTION	PART OR IDENTIFYING NO.	MATERIAL OR SPEC

PARTS LIST

REV	DESCRIPTION	APVD
0	ER 2444 10/06/92	JRH
1	ECN 6694 AAJ 11/10/93	HAB/PAN
2	ECN 9047 MJC 7/14/95	GLS
3	FCN TM-1066 SAB 10/03/95	GLS
4	ECN 9317 SAB 10/17/95	DRS
5	ECN 9987 SRD 6/14/96	DRS
6	ECN 26189 DAK 2/7/05	HAB

REVISIONS

VERIFY ALL DOCUMENTS FOR CURRENT REVISION AND PENDING CHANGES PRIOR TO EACH USE
INIT _____ DATE _____

UNLESS OTHERWISE SPECIFIED	DRAFTER W. KOCH	DATE 08/12/92
NOTFOUND	CHECKER D. SHAFFER	DATE 09/29/92
TOLERANCES-DO NOT SCALE	ENGR. P. NESTER	DATE 09/29/92
2 PL DEC ± N/A; 3 PL DEC ± N/A; ANGLES ± N/A; N/A	D. RICKETTSON	09/29/92
FRACTIONS ± N/A	CDG.MGR.APPVL T. COTTRELL	DATE 10/01/92
D.SPEC.NO. 2038	SYS.ENGR.APPVL	DATE
NEXT ASSEMBLY	Q.A.APPVL P. WILLEMS	DATE 10/5/92
	DFTG.SUPR. J. HORTON	DATE 10/06/92

A/E CONTRACT NO. CODE IDENT. NO.

FOR

WEST VALLEY NUCLEAR SERVICES CO.,INC.
WEST VALLEY, NEW YORK

VF
SHIELDING GAS & ARGON GAS SYSTEM
P&ID

DWG SIZE D | SCALE N/A | WEIGHT | DWG NO. 905D-010 | REV 6

A/E DWG NO. | SHEET 1 OF 1

1=1.00 149746

CAD DRAWING-DO NOT REVISE THIS ORIGINAL