VERIFY ALL DOCUMENTS FOR CURRENT REVISION AND PENDING CHANGES PRIOR TO EACH USE.
INIT_____ DATE_____

DWG NO. | SH

REVISIONS

ZONE	REV	DESCRIPTION	DATE	APPROVED
	0	ER 583	12/12/85	[illegible]
D7 B5	1	REV. PER ECN. 2564	8-9-88	RBH/CAN
ALL	2	REVISED PER ECN 2631	9/19/88	RJR/FEK
ALL	3	ECN 2838	12/22/88	RJR/FEK
ALL	4	REVISED PER ECN 3015 △ OMITTED FOR CLARITY CK RJR	7/25/89	FJK/FEK
ALL	5	REVISED PER ECN 3169 △ OMITTED FOR CLARITY CK RJR	9/26/89	DRS/FEK

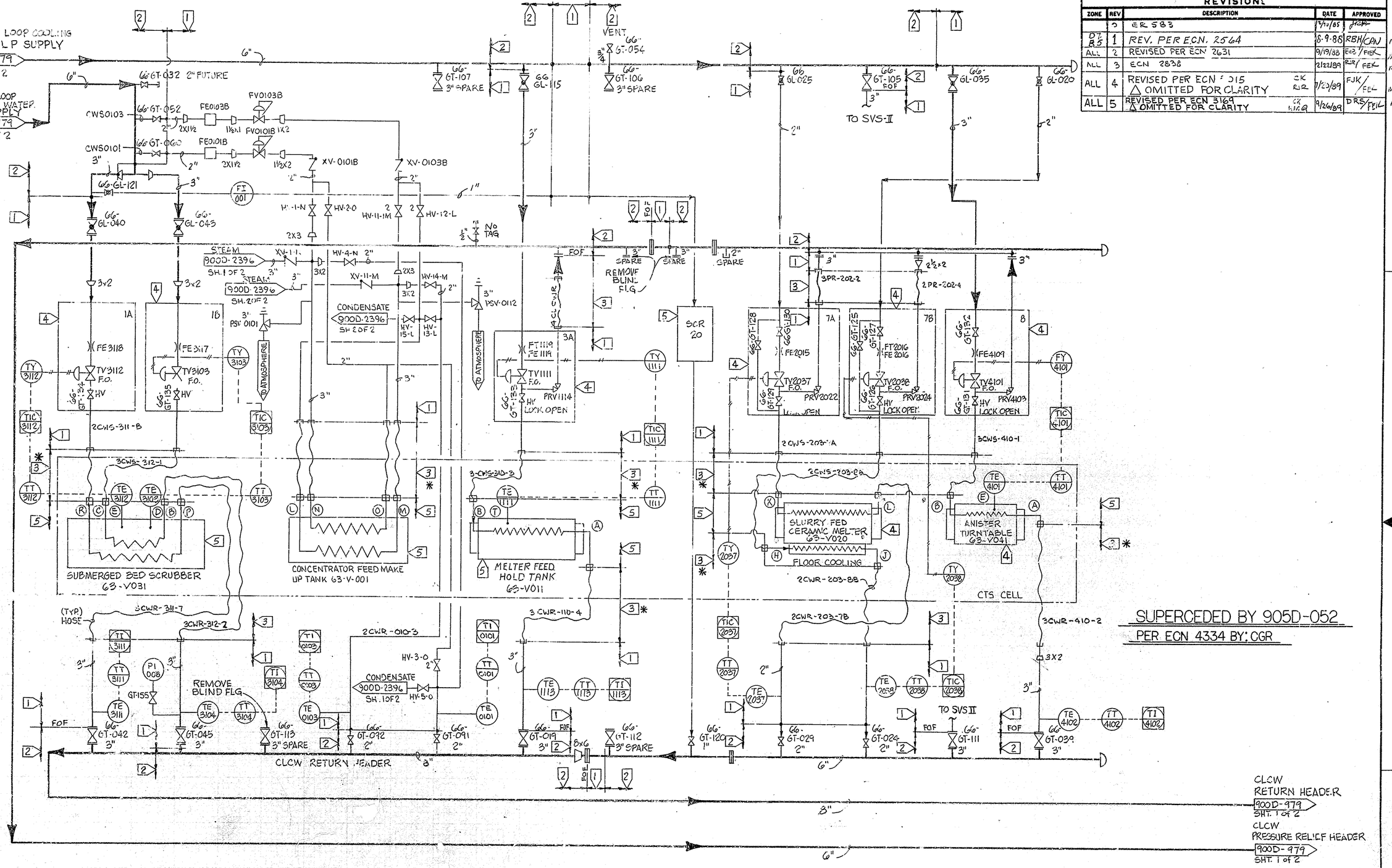

QTY. REQD.	SYM	ITEM NO.	NOMENCLATURE OR DESCRIPTION	CODE IDENT. NO.	PART OR IDENTIFYING NO.	MATERIAL	SPECIFICATION	ZONE

PARTS LIST

INDEX CODE NUMBER				UNLESS OTHERWISE SPECIFIED
AREA	DWG. TYPE	SYS. EL.	ORIG.	
900	52	66	01	TOLERANCES - DO NOT SCALE

SPEC CODE

2PL DEC	3PL DEC	ANGLES
±	±	±
FRACTIONS ±		

CONTRACT NO.: DFTSFN GACA
DATE OF DWG.: 12/3/85
CHECKER: GP Cole 12/5/85
DFTG. SUPVR.: [illegible] 12/10/85
DESIGN
ENGR.: GP Cole 12/5/85
XE Kabel 1-5-86
FACILITIES
ENGR.: 12/5/85

A/E CONTRACT NO. | CODE IDENT. NO.

FOR
West Valley Nuclear Services Co., Inc.
West Valley, New York

COMPONENT TEST STAND
P & ID
CLOSED LOOP COOLING WATER SYSTEM

DWG. SIZE: D | SCALE: – | WEIGHT | A/E DWG NO. | DWG NO. 900D-979 | REV 5 | SHEET 2 OF 2

✱ WVNS TO DISCONNECT AT VESSEL

SCOPE OF WORK KEY

1. Remove existing piping, hangers and supports
2. Existing piping to remain
3. Remove existing hoses
4. Remove existing equipment
5. Existing equipment to remain