VERIFY ALL DOCUMENTS FOR CURRENT REVISION AND PENDING CHANGES PRIOR TO EACH USE.
INIT_____ DATE_____

DWG NO. 900D-2055 SH 1

REVISIONS				
ZONE	REV	DESCRIPTION	DATE	APPROVED
	0	ER 1219	1/21/88	

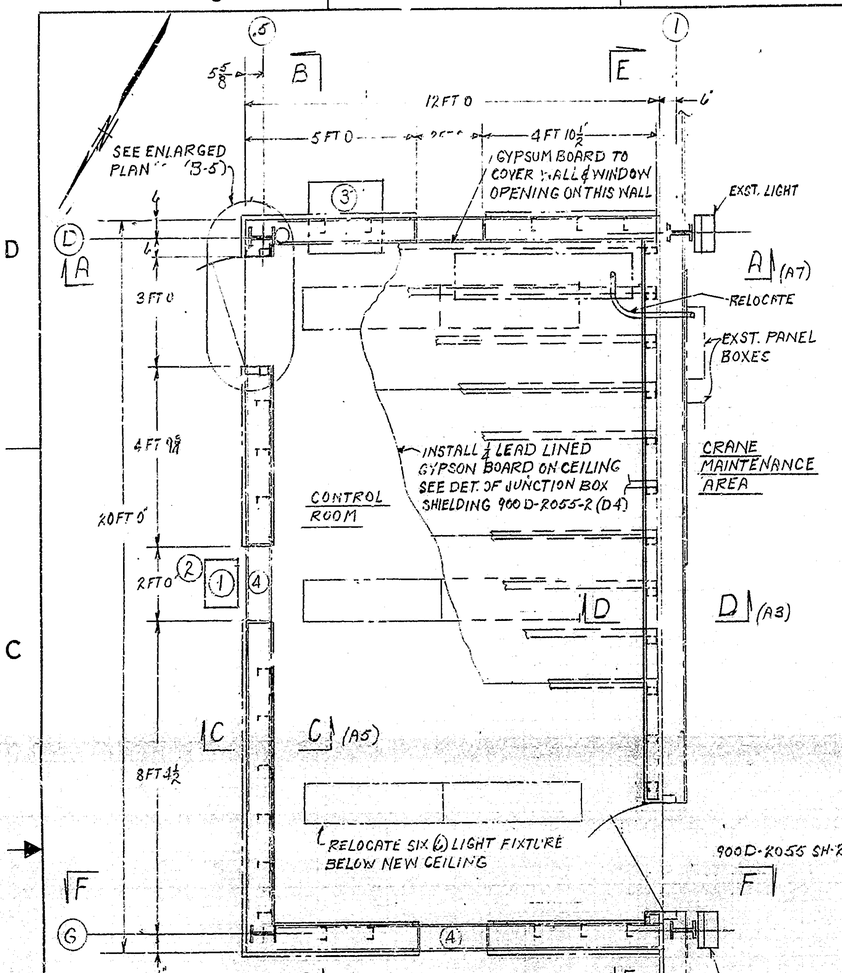

PLAN
SCALE ½"=1'-0"

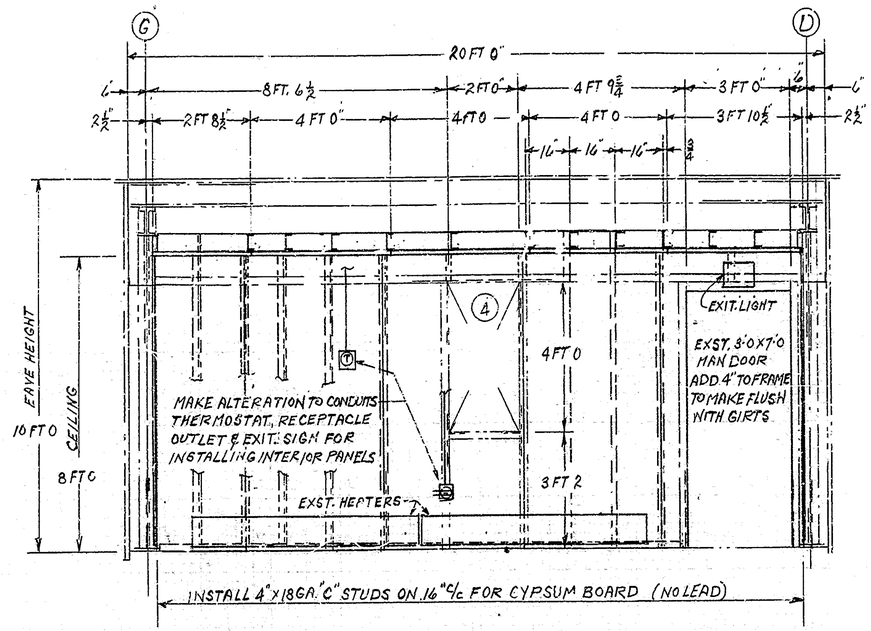

SECTION B-B
SCALE ½"=1'-0"

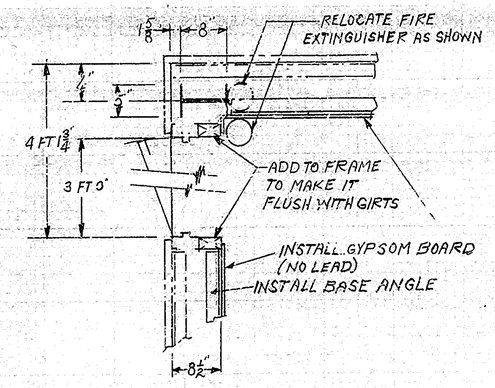

ENLARGED PLAN "A"
SCALE 1"=1'-0"

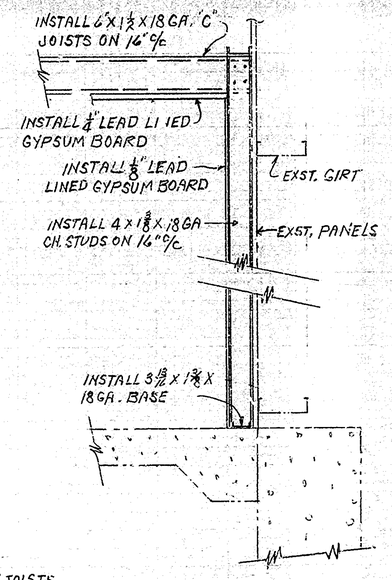

SECTION D-D
SCALE 1"=1'-0"

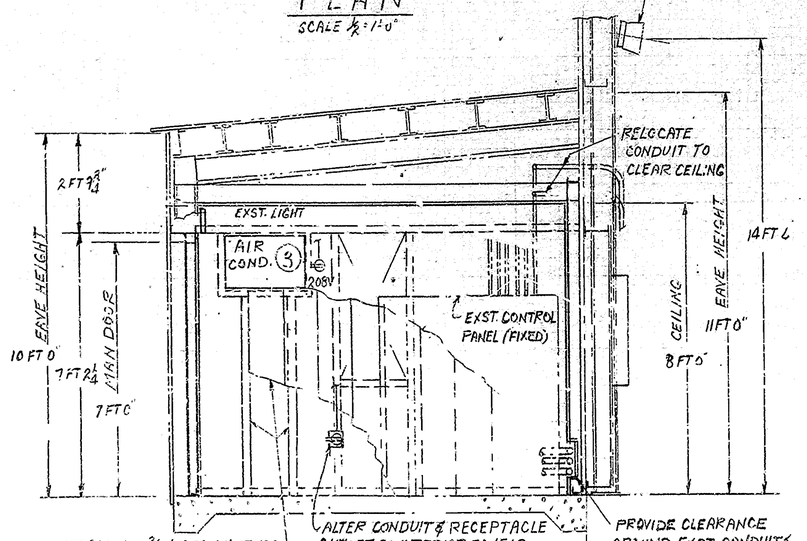

SECTION A-A
SCALE ½"=1'-0"

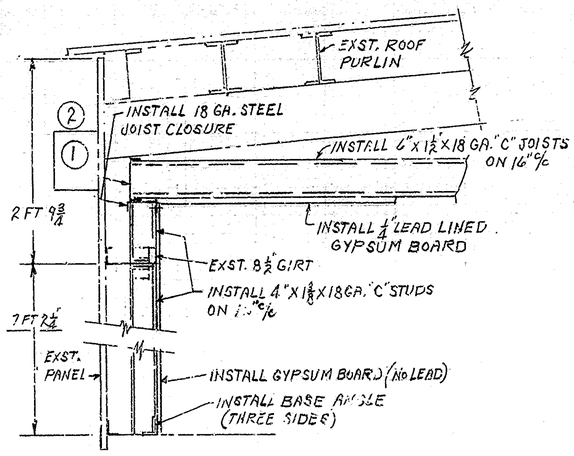

SECTION C-C SCALE 1"=1'-0"

QTY REQD	ITEM NO.	NOMENCLATURE OR DESCRIPTION	PART OR IDENTIFYING NO.	MATERIAL OR SPEC
2	4	24X48 WINDOW FIXED THERMAL PANE GLASS ALUMINUM FRAME		
1	3	1½ TON AIR CONDITIONER		
1	2	HUBBEL PERIMALITER PHOTO CONTROL 120V	120 VOLT	(BY WVNS)
1	1	HUBBEL PERIMALITER WALL MOUNTED 70W HPS LAMP	70W	(BY WVNS)

PARTS LIST

UNLESS OTHERWISE SPECIFIED	DRAFTER R.B. HOOPER	DATE 10-1-87	A/E CONTRACT NO. / CODE IDENT. NO.
	CHECKER R.C. Baker	DATE 1-21-88	FOR West Valley Nuclear Services Co., Inc. West Valley, New York
TOLERANCES—DO NOT SCALE	ENGR. R.C. Baker	DATE 1-21-88	
2 PL DEC ± / 3 PL DEC ± / ANGLES ± / AA ✓			RTS DRUM CELL ALTERATION TO CONTROL ROOM PLAN AND SECTIONS
FRACTIONS ± 1/8	COG. MGR. APPVL C.J. Mahler	DATE 1/20/88	
D. SPEC. NO. 1186	E&OS APPVL D.A. Dooley	DATE 1/18/88	
NEXT ASSEMBLY 900D-1201	Q.A. APPVL Richard Fox	DATE 1/19/88	DWG SIZE D / SCALE ½"=1'-0" / WEIGHT / DWG NO. 900D-2055 / REV 0
	DFTG. SUPR.	DATE 1/21/88	A/E DWG NO. / SHEET 1 OF 2