VERIFY ALL DOCUMENTS FOR CURRENT REVISION AND PENDING CHANGES PRIOR TO EACH USE.
INIT_____ DATE_____

DWG NO 900-D-1678 SH 2

REVISIONS				
ZONE	REV	DESCRIPTION	DATE	APPROVED
	0	CREATED BY ECN 1350 FOR EP 966	1-27-87	

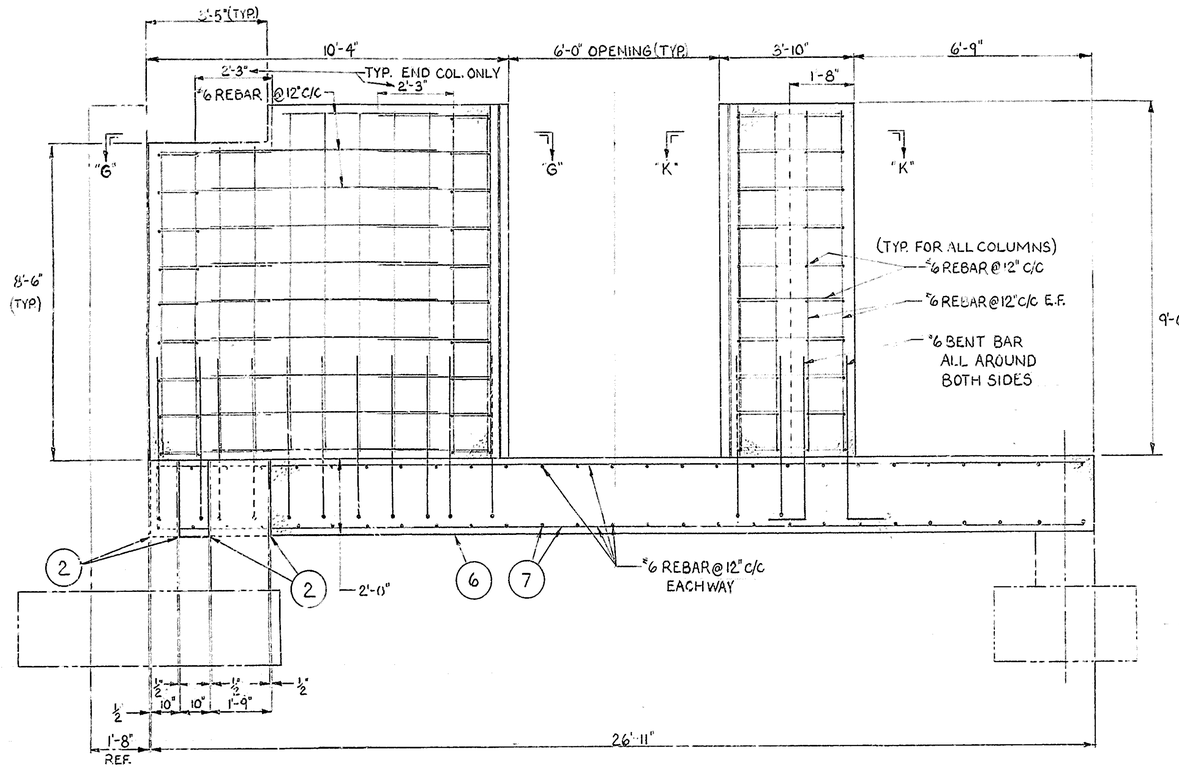

SECTION VIEW "A-A"
SCALE: 1/2"=1'-0"

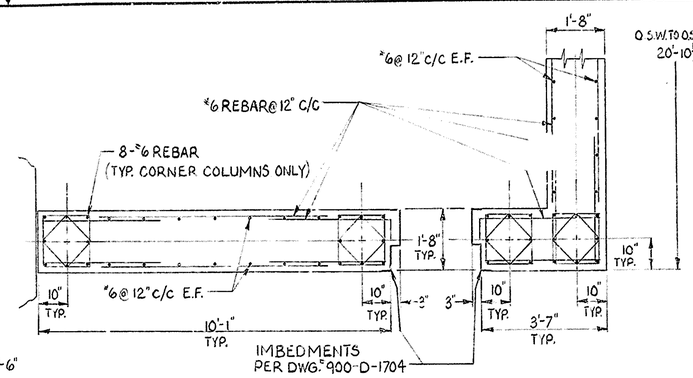

SECTION "G-G"
SCALE: 1/2"=1'-0"

SECTION "K-K"
SCALE: 1/2"=1'-0"

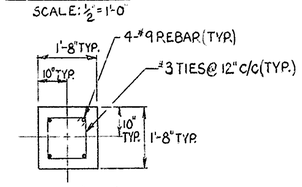

VIEW "J-J"

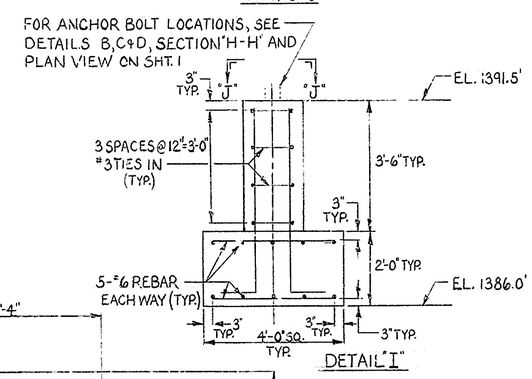

DETAIL "I"

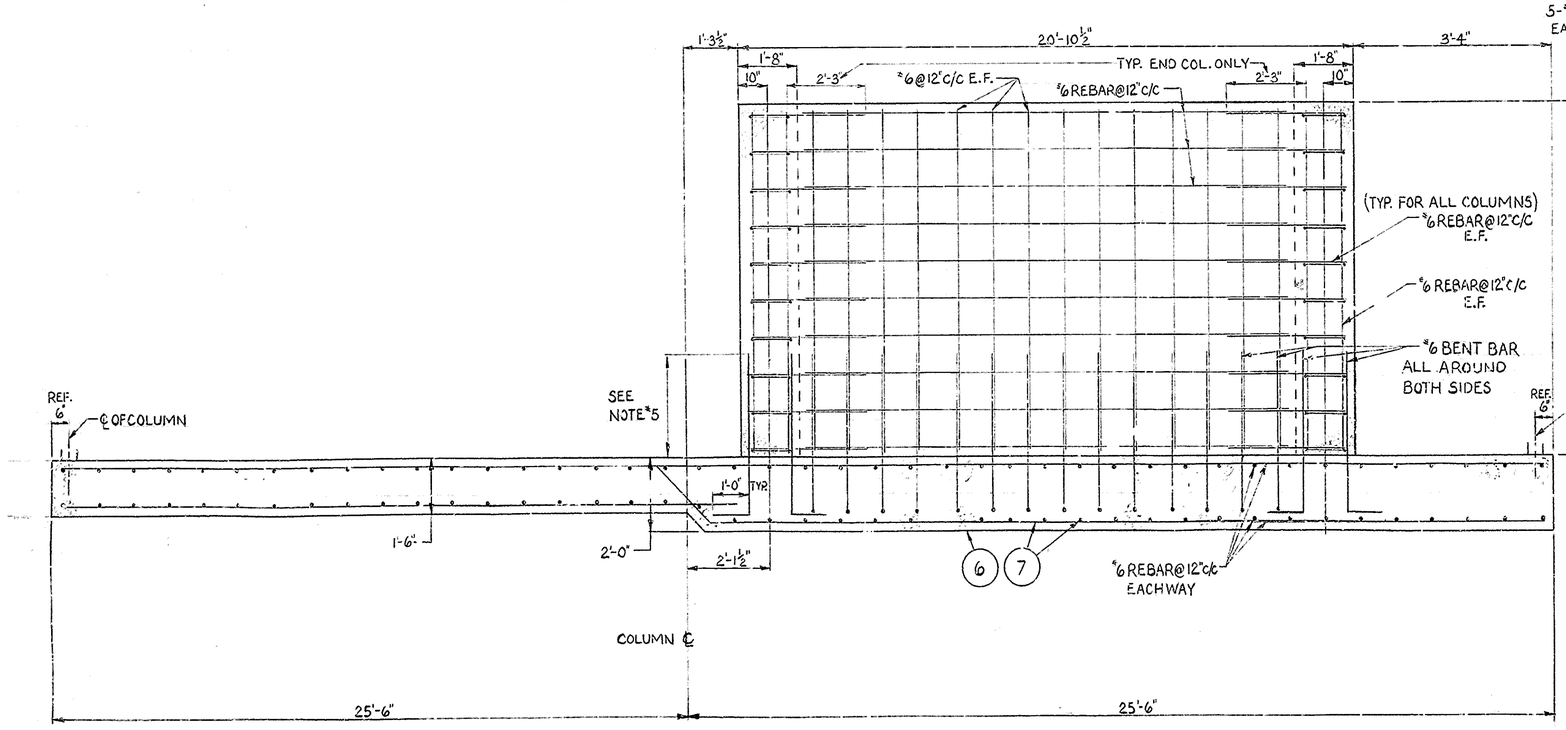

SECTION VIEW "E-E"
SCALE: NTS

BAR SCALE: 1/2"=1'-0"

SEE SHEET 1 OF 2 FOR NOTES AND PARTS LIST

QTY REQD	ITEM NO.	NOMENCLATURE OR DESCRIPTION	PART OR IDENTIFYING NO.	MATERIAL OR SPEC

PARTS LIST

UNLESS OTHERWISE SPECIFIED	DRAFTER	DATE 1-21-87	A/E CONTRACT NO. / CODE IDENT. NO.
DIMENSIONS IN FEET AND INCHES	CHECKER	DATE 1-21-87	FOR West Valley Nuclear Services Co., Inc. West Valley, New York
TOLERANCES - DO NOT SCALE	ENGR.	DATE 1-26-87	
2 PL DEC / 3 PL DEC / ANGLES			DRUM CELL LOADOUT SECTION VIEWS AND DETAIL
± N/A / ± N/A / ± N/A	COG. MGR. APPVL	DATE 1/27/87	
FRACTIONS ± 1/8	E&OS APPVL	DATE 1/27/87	
D. SPEC. NO.	Q.A. APPVL	DATE 1/27	DWG SIZE D / SCALE AS NOTED / WEIGHT ~ / DWG NO. 900-D-1678 / REV 0
NEXT ASSEMBLY	DFTG SUPR	DATE 1/27/87	A/E DWG NO. / SHEET 2 OF 2

REV	REV STATUS
2 1	SHEET OF SHEETS

REPROCRAFT