DWG NO. 900-D-1380 SH 1

VERIFY ALL DOCUMENTS FOR CURRENT REVISION AND PENDING CHANGES PRIOR TO EACH USE
INIT. _____ DATE _____

REVISIONS					
ZONE	REV	DESCRIPTION	DWN	DATE	APPROVED
	5	REV. PER ECN 2381	WCK	4-21-88	PMB
	6	REV. PER ECN # 2416	DRS	5-11-88	PMB
	7	ECN 25557		5-6-03	KAD
	8	ECN 25782	LRO	1-22-04	KAD

REVISIONS					
ZONE	REV	DESCRIPTION	DWN	DATE	APPROVED
	0	ER798		7/11/86	
B,2	1	REV'D PER ECN # 846		7/17/86	DAS/
	2	REV'D PER ECN # 858		7/21/86	DAS/
	3	REV'D PER ECN # 1167		11/3/86	DAS
	4	REV. PER ECN 1328	WAD	12-31-86	

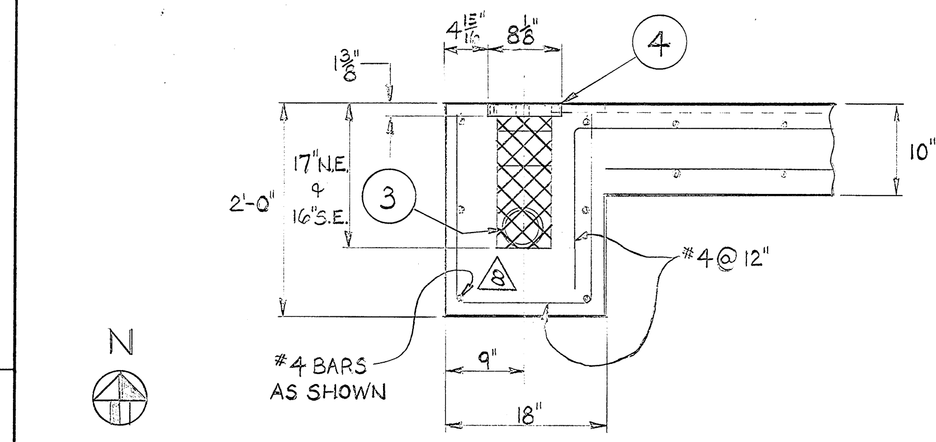

SECTION "C"-"C"
SCALE: 1" = 1'-0"

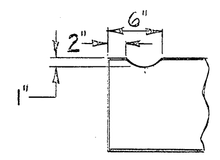

SECTION "D"-"D" SCALE: 1" = 1'-0"

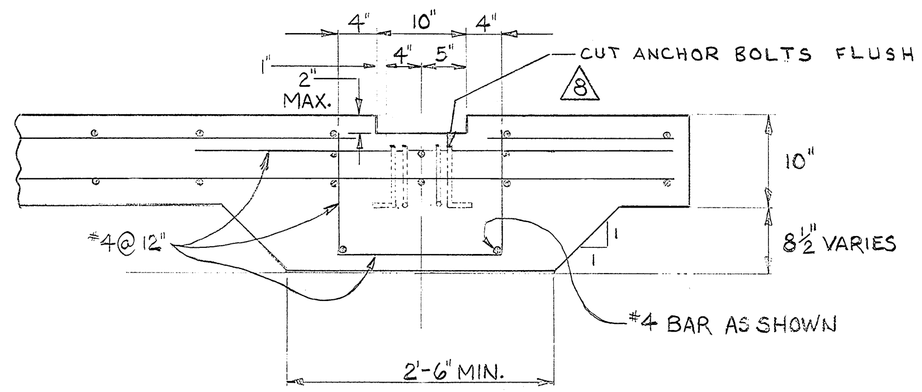

SECTION "F"-"F"
SCALE: 1" = 1'-0"

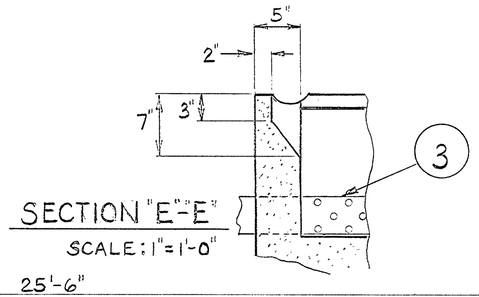

SECTION "E"-"E"
SCALE: 1" = 1'-0"

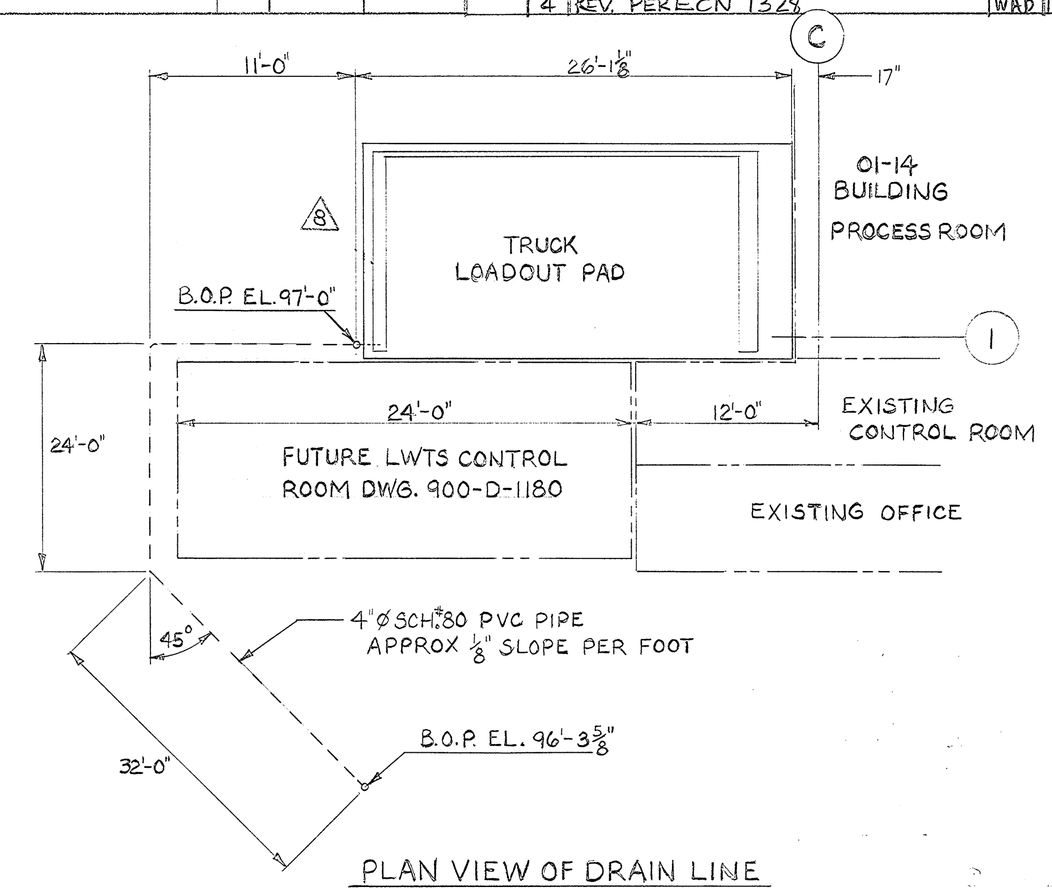

PLAN VIEW OF DRAIN LINE
SCALE: N.T.S.
REF. DWG. 900-D-1366 SHT. 2 OF 3

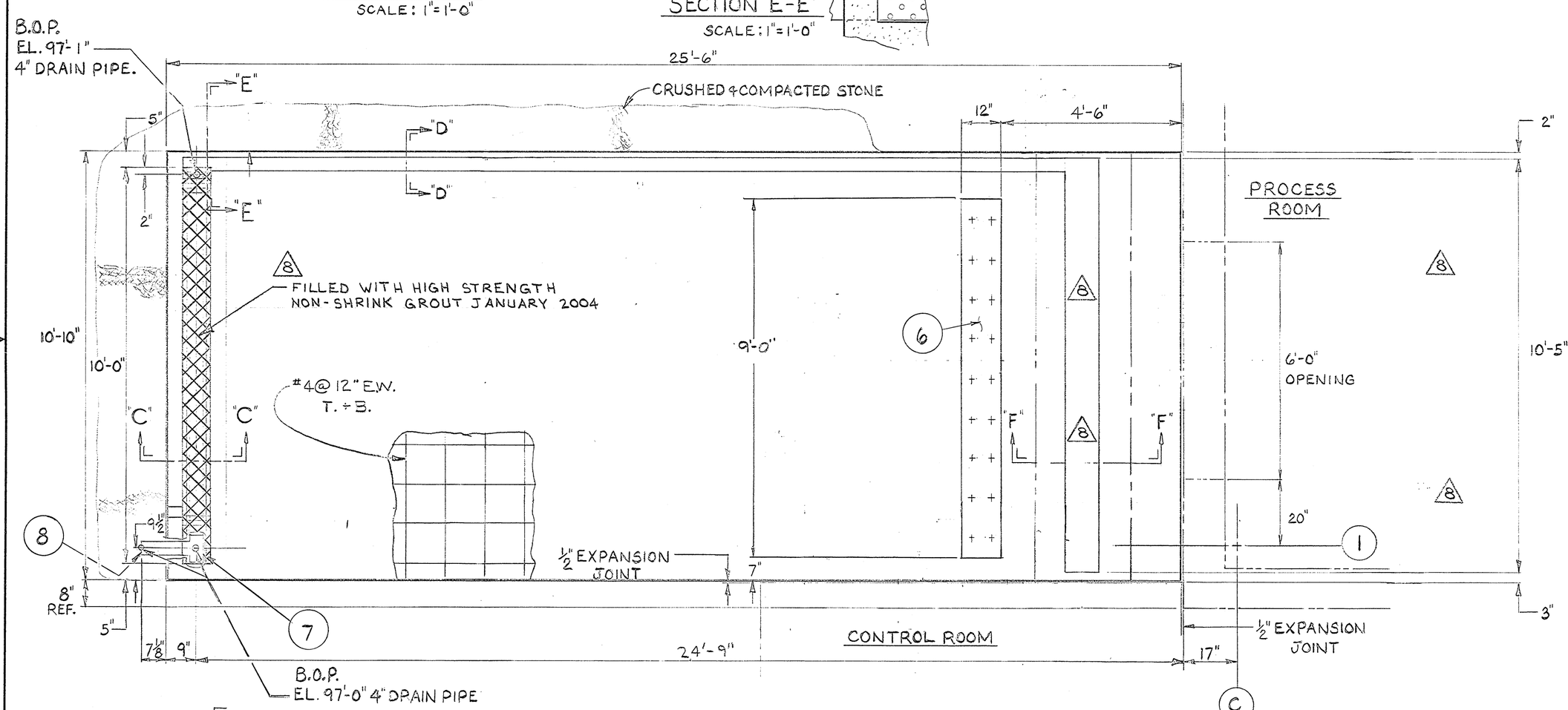

FOR CONTINUATION OF THIS DRAIN PIPE SEE PLAN VIEW OF DRAIN LINE

PLAN VIEW OF LOADOUT PAD
SCALE: 1/2" = 1'-0"

SCOPE OF WORK:

1. INSTALL A ELEVEN FOOT (11 FT.) WIDE X TWENTY-SIX FOOT (26 FT.) LONG CONCRETE TRUCK LOADING PAD CAPABLE OF SUPPORTING A MINIMUM LOAD OF TWELVE TON (12 TONS) AXLE WEIGHT THROUGH OUT.
2. INSTALL TRUCK PAD DRAINAGE BASIN AND FOUR INCH (4") SCHEDULED #80 PVC DRAIN LINE IN ACCORDANCE WITH PLAN VIEWS FOR LOADOUT PAD AND DRAIN LINE.
3. WORK SHALL BE PERFORMED PER WVNS-CB-351, SECTIONS 03300 CAST-IN-PLACE CONCRETE, AND 03200 REINFORCED STEEL FOR CONCRETE SPECIFICATIONS. BACKFILL COMPACTION PER SECTION 02100: CONTRACTOR MAY HAVE TO EXCAVATE CONTAMINATED SOIL.

NOTES:

1. ALL WELDING TO BE DONE IN ACCORDANCE WITH D1.0 AWS CODE LATEST EDITION.
2. THIS DIMENSION IS BASED ON A GMC TRUCK WITH A REAR AXLE TRACK WIDTH OF 94 1/2".
3. FIELD VERIFY UTILIZING TRUCK AS GUIDE.

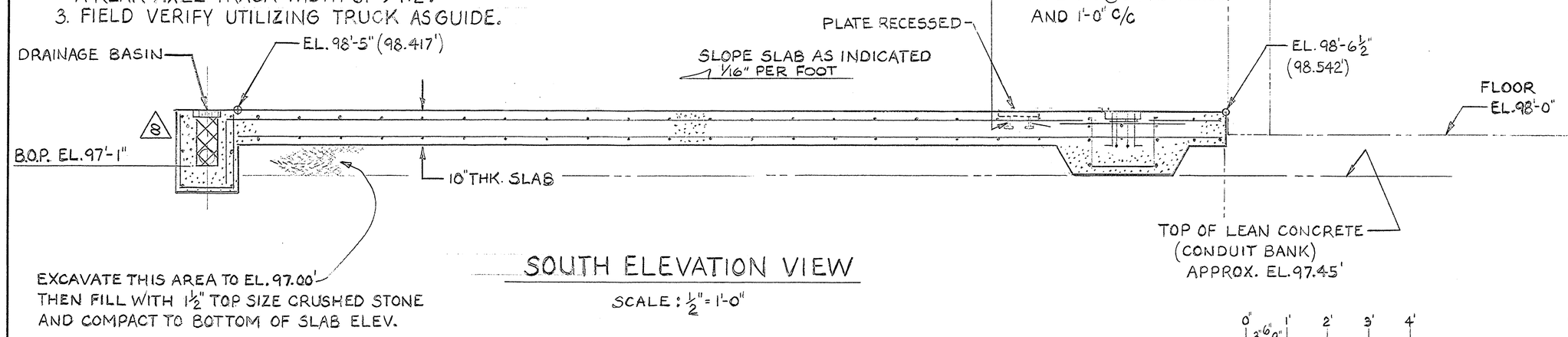

SOUTH ELEVATION VIEW
SCALE: 1/2" = 1'-0"

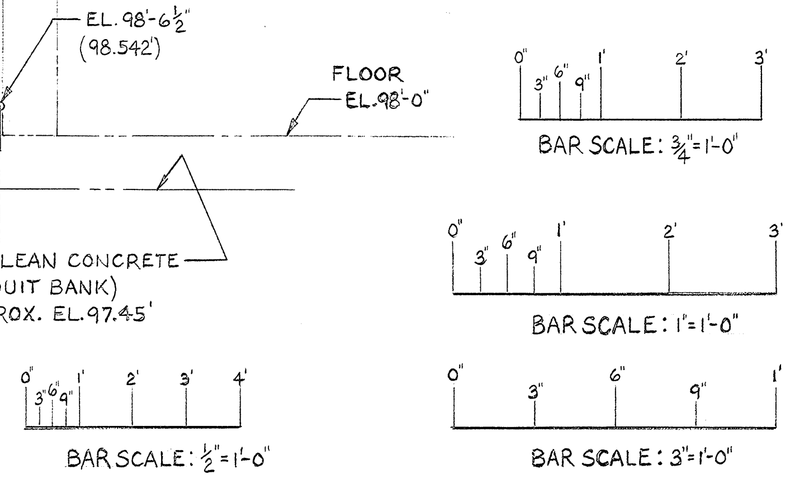

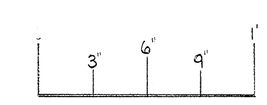

QTY REQD	ITEM NO.	NOMENCLATURE OR DESCRIPTION	PART OR IDENTIFYING NO.	MATERIAL OR SPEC
	11			
	10			
	9			
1	8	PIPE 4" SCH. #80		PVC
1	7	TEE 4" SCH. #80		PVC
1	6	PLATE 3/4" THK.		C.STL.A36
AS REQD	5	1/2" EXPANSION JOINT 35'-0" LG.		RUBBER
15	4	SQUARE DRAINAGE GRATING 8" X 8" X 1 1/4" THK.	McMASTER CARR 2467K11	GRAY IRON
1	3	PERFORATED PIPE 4" SCH. #80, 24-1/2" Ø HOLES/FT., FOR 8 1/2" LGTH.		PVC
16	2	ANCHOR BOLT 5/8" Ø X 10" LG.		A307
	1			

PARTS LIST

UNLESS OTHERWISE SPECIFIED					
TOLERANCES DO NOT SCALE					
2 PL DEC	3 PL DEC	ANGLES			
±	±	±			
FRACTIONS ±					
D. SPEC. NO.					
NEXT ASSEMBLY					

DRAFTER	Harold A. Schendel	DATE 7-11-86
CHECKER	J. D. Franco	DATE 7-11-86
ENGR.		DATE 7-11-86
AA	R. Schuff	7-11-86
COG. MGR. APPVL		DATE 7/14/86
E&OS APPVL	N/A	DATE 7/14/86
Q.A. APPVL	N/A	DATE 7/14/86
DFTG. SUPR.		DATE 7/14/86

A/E CONTRACT NO. CODE IDENT. NO.

FOR
West Valley Nuclear Services Co., Inc.
West Valley, New York

R.T.S.
TRUCK LOADOUT PAD

DWG SIZE	SCALE AS NOTED	DWG NO.	REV
D	WEIGHT	900-D-1380	3
	A/E DWG NO.	SHEET 1 OF 1	

REPROCRAFT 52107