900D-1201 SH 2

DWG NO. 900D-1201 SH 2

REVISIONS				
ZONE	REV	DESCRIPTION	DATE	APPROVED
	0	ER749	5/20/86	JRH
	1	REVISED PER ECN 1058 & 1064	9/30/86	RTS
	2	REVISED PER ECN 1129	10/15/86	NRB
	3	REVISED PER ECN 1213	11-13-86	RTS
	4	REVISED PER ECN 1350 AND 1388	1-26-87	NRB
	5	REVISED PER ECN 1637	5-18-87	RJ
	6	REVISED PER ECN 1706	6-15-87	WZ/NRB

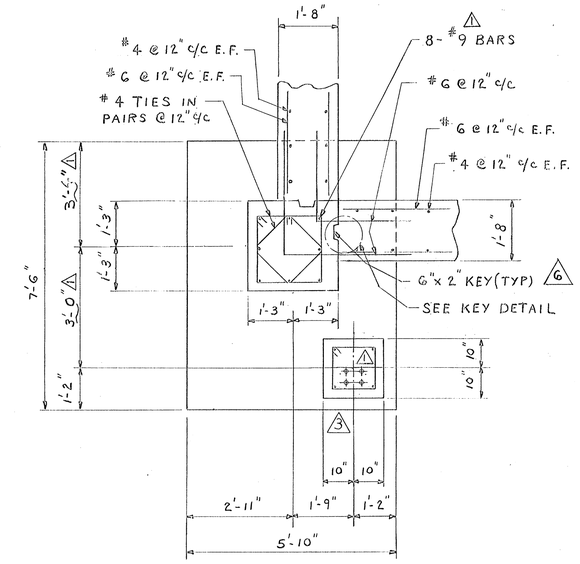

DETAIL "Y"
SCALE: 1/2" = 1'-0"

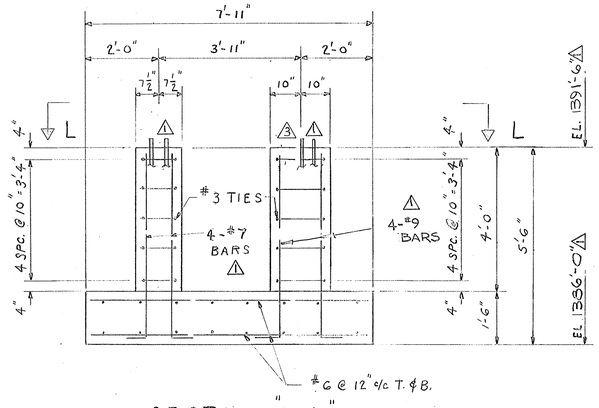

SECTION "K-K"
SCALE: 1/2" = 1'-0"

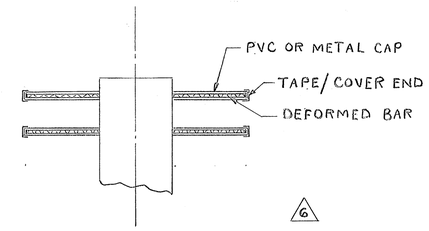

DOWEL CAP DETAIL
TYP. COL. NO. 4 (INTERIOR),
5, 6, 7, 8, 9, 10, 11, 12, 13
AND 14 (INTERIOR)

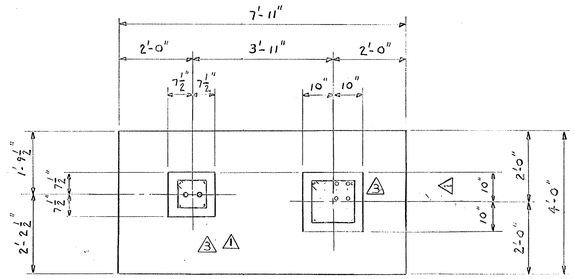

SECTION "L-L"
SCALE: 1/2" = 1'-0"

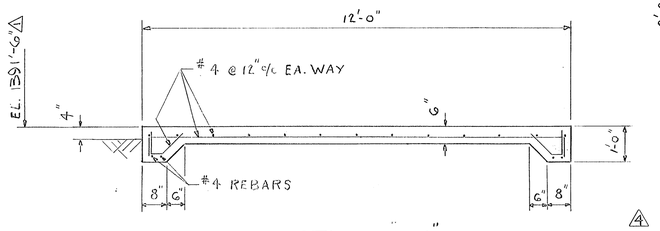

SECTION "H-H"
SCALE: 1/2" = 1'-0"

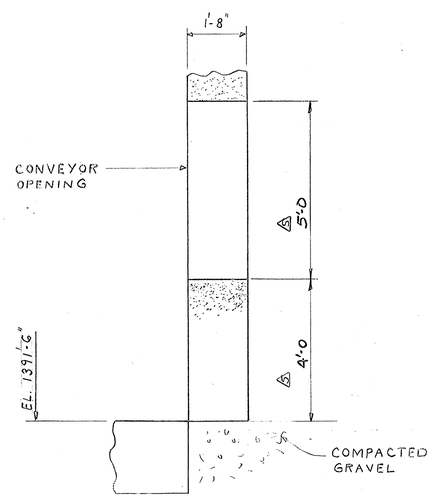

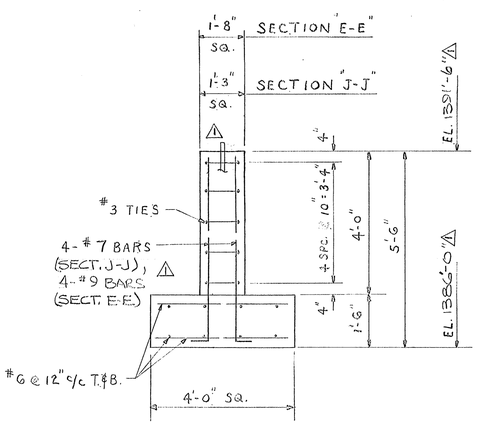

SECTION "J-J"
SECTION "E-E"
SCALE: 1/2" = 1'-0"

SECTION "M-M"
SCALE: 1/2" = 1'-0"

BAR SCALE
1 2 3 4
1/2" = 1'-0"

QTY. REQD.	SYM	ITEM NO.	NOMENCLATURE OR DESCRIPTION	CODE IDENT. NO.	PART OR IDENTIFYING NO.	MATERIAL	SPECIFICATION	ZONE

PARTS LIST

INDEX CODE NUMBER				UNLESS OTHERWISE SPECIFIED	CONTRACT NO.	A/E CONTRACT NO.	CODE IDENT. NO.
AREA	DWG. TYPE	CL.	ORIG.	A.C.I. 318 & 347	DFTSPN. W. ZIMMERMAN / DATE OF DWG. 4-10-86	FOR West Valley Nuclear Services Co., Inc. West Valley, New York	
				TOLERANCES - DO NOT SCALE	CHECKER K. Schuff 5/6/86 / DFTG. SUPVR. 5/12/86		
SPEC CODE				2PL DEC ± / 3PL DEC ± / ANGLES ± / ✓ AA	DESIGN K. Schuff 5/6/86 / ENGR. 5/6/86	RTS-DRUM CELL SHIELD WALL SECTIONS	
				FRACTIONS ±			
					FACILITIES N.A. / Q.A.	DWG. SIZE D / SCALE / WEIGHT / DWG NO. 900D-1201 / REV 6	
					ENGR. 5/6/86 / E&OS 5/6/86	A/E DWG NO. / SHEET 2 OF 2	

REPRODRAFT