900D-12.01 SH 1

DWG NO. 900D-1201 SH 1

REVISIONS				
ZONE	REV	DESCRIPTION	DATE	APPROVED
	0	ER 749	5/20/86	
	1	REVISED PER ECN 1058 & 1064	9/30/86	
	2	REVISED PER ECN 1129	10/15/86	
	3	REVISED PER ECN 1213	11-13-86	
	4	REV. PER ECN NO. 1350 & 1388	1-26-87	
	5	REV. PER ECN 1637	5-14-87	
	6	REVISED PER ECN 1674	6-2-87	
	7	REVISED PER ECN 1706	6-15-87	

1. REINFORCING STEEL SHALL BE INTERMEDIATE GRADE BILLET STEEL BARS CONFORMING TO ASTM-A615.
2. ANCHOR BOLTS SHALL CONFORM TO ASTM-A307.
3. GRAVEL & SOIL COMPACTION IS TO BE PER WVNS SPEC. WVNS-CS-104.
4. ALL CONCRETE WORK IS TO COMPLY WITH ACI 318-77.
5. ALL REINFORCING BARS SHALL HAVE 2" MINIMUM CONCRETE COVER.
6. FOR TYPICAL ANCHOR BOLT SIZE & PROJECTION SEE SEC. A-A.
7. SEE DRAWING 900C-1622 FOR ANCHOR BOLT LAYOUT.
8. SUBCONTRACTOR TO MODIFY REINFORCING STEEL AS REQUIRED IN FIELD. FLAME CUT IS PERMITTED
9. CONCRETE FOR PIERS, FOOTINGS & WALLS TO BE 4000 P.S.I. AT 28 DAYS.
10. PROVIDE DOWEL CAPS AT COLUMN NOS. 4 (INTERIOR), 5, 6, 7, 8, 9, 10, 11, 12, 13 AND 14 (INTERIOR).

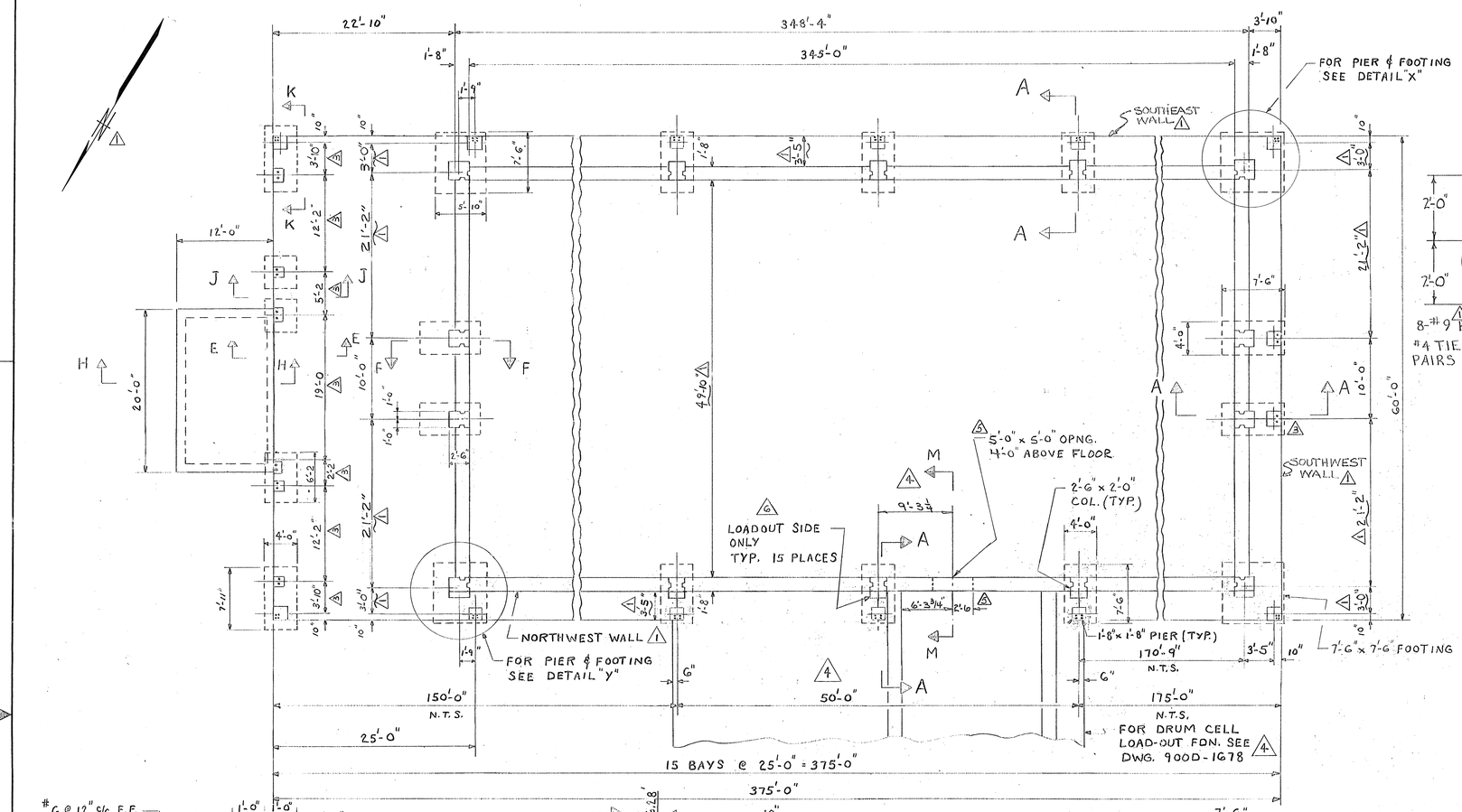

PLAN
SCALE: 1/8" = 1'-0"

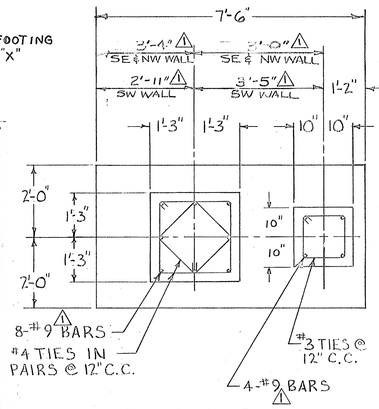

SECTION B-B
SCALE-1/2" = 1'-0"

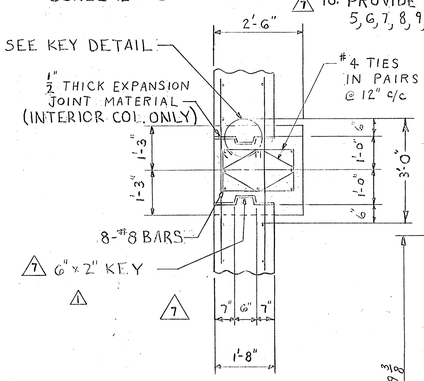

SECTION "C-C"
SCALE: 1/2" = 1'-0"

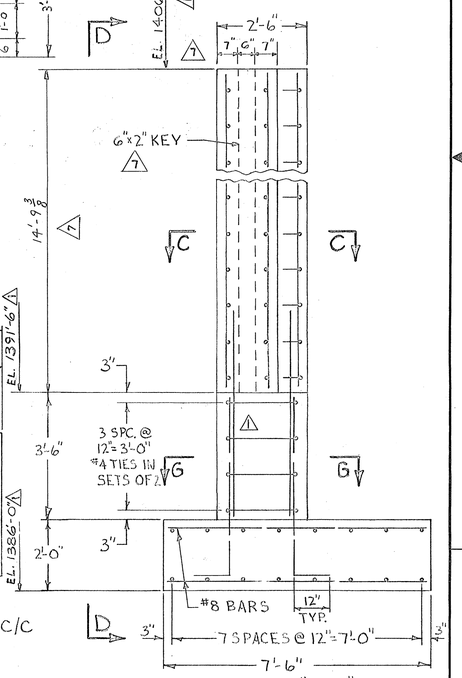

SECTION "F-F"
SCALE-1/2" = 1'-0"

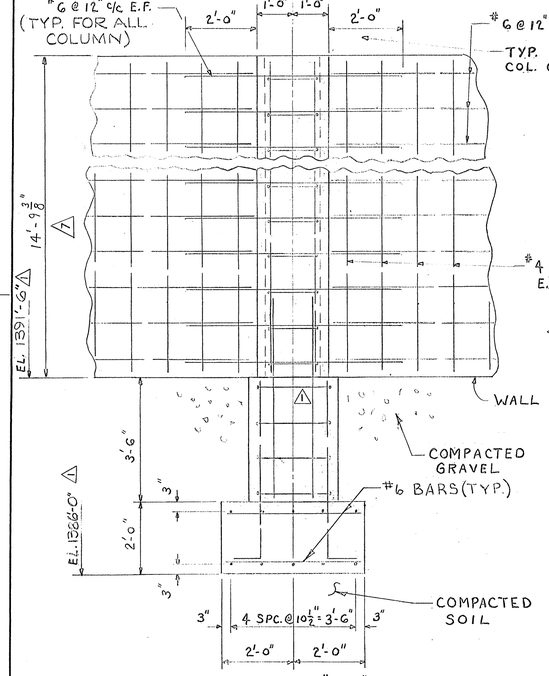

SECTION "D-D"
SCALE: 1/2" = 1'-0"

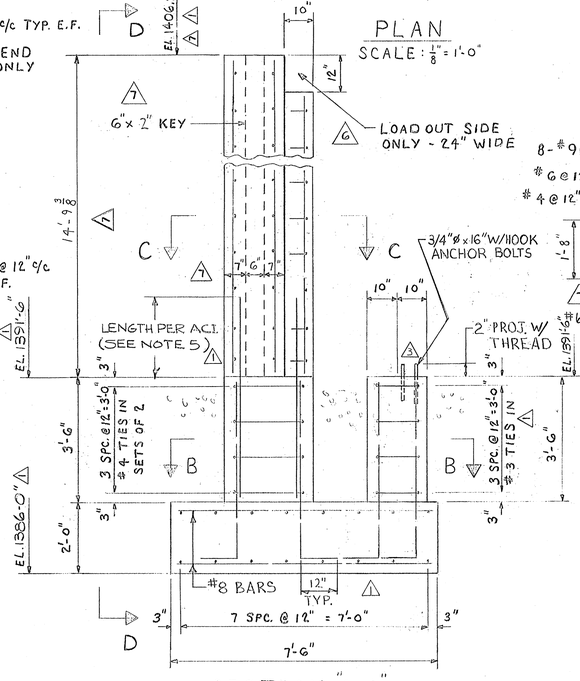

SECTION "A-A"
SCALE: 1/2" = 1'-0"

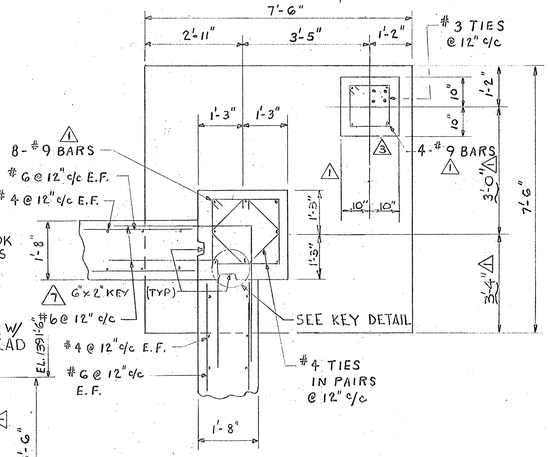

DETAIL "X"
SCALE: 1/2" = 1'-0"

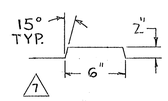

KEY DETAIL
TYP. FOR ALL KEYS
SCALE- 1"=1'-0"

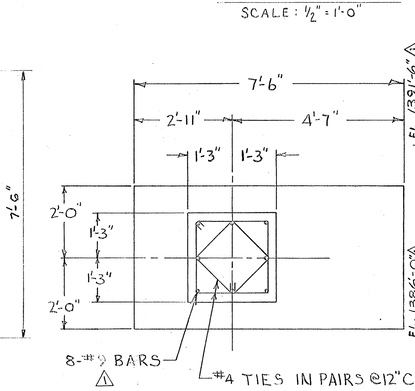

SECTION G-G
SCALE-1/2" = 1'-0"

QTY. REQD.	SYM	ITEM NO.	NOMENCLATURE OR DESCRIPTION	CODE IDENT. NO.	PART OR IDENTIFYING NO.	MATERIAL	SPECIFICATION	ZONE

PARTS LIST

INDEX CODE NUMBER				UNLESS OTHERWISE SPECIFIED	CONTRACT NO.	
AREA	DWG. TYPE	CL.	ORIG.	A.C.I. 318 & 347	DFTSPN. W. ZIMMERMAN	DATE OF DWG. 3-5-86
				TOLERANCES - DO NOT SCALE	CHECKER K. Schulz 5/6/86	DFTG. SUPVR.
SPEC CODE				2PL DEC ± / 3PL DEC ± / ANGLES ± / AA	DESIGN K. Schulz 5/6/86	ENGR. 5/6/86
				FRACTIONS ±		
					FACILITIES N.A.	Q.A.
					ENGR. 5/14/86	E & OS

A/E CONTRACT NO. | CODE IDENT. NO.

FOR
West Valley Nuclear Services Co., Inc.
West Valley, New York

RTS - DRUM CELL
SHIELD WALL DETAILS

DWG. SIZE D | SCALE 1/8", 1/2" = 1'-0" | WEIGHT | DWG NO. 900D-1201 | REV 7
A/E DWG NO. | SHEET 1 OF 2

REPROCRAFT